RDF12/14/16

Rhino Dual Fold Rake

Rev 05-16

P/N 5119P

PART'S MANUAL

An Operator's Manual was shipped with the equipment in the Manual Canister. This Operator's Manual is an integral part of the safe operation of this machine and must be maintained with the unit at all times. READ, UNDERSTAND, and FOLLOW the Safety and Operation Instructions contained in this manual before operating the equipment. If the Operator's Manual is not with the equipment, contact your dealer or M&W (800-446-5158) to obtain a Free copy before operating the equipment.

ATTENCIÓN!

Si No Lee Ingles, Pida Ayuda a Alguien Que Si Lo Lea Para Que le Traduzca las Medidas de Seguridad.

LEA EL INSTRUCTIVO

1020 South Sangamon Ave.
Gibson City, Illinois 60936
217-784-4261

MEMBER OF THE ALAMO GROUP
ALWAYS ON THE CUTTING EDGE

© 2015 Alamo Group Inc.

TO THE OWNER/OPERATOR/DEALER

All implements with moving parts are potentially hazardous. There is no substitute for a cautious, safe-minded operator who recognizes the potential hazards and follows reasonable safety practices. The manufacturer has designed this implement to be used with all its safety equipment properly attached to minimize the chance of accidents.

BEFORE YOU START!! Read the safety messages on the implement and shown in your manual. Observe the rules of safety and common sense!

DANGER

FAILING TO FOLLOW SAFETY MESSAGES AND OPERATING INSTURCTIONS CAN CAUSE SERIOUS BODILY INJURY OR EVEN DEATH TO OPERATOR AND OTHERS IN THE AREA.

1.

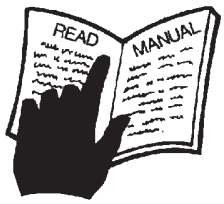

2. NO RIDERS, NO CHILDREN OPERATORS

3. USE SAFETY SHOES, HARD HAT, SAFETY GLASSES, SEAT BELTS, & ROPS

4. BLOCK UP SECURELY BEFORE WORKING UNDER.

1. Study and understand Operator's Manuals, Safety Signs, and Instructional Decals for tractor & flail mower to prevent misuse, abuse, & accidents. Practice before operating mower in a confined area or near passersby.

- Learn how to stop engine suddenly in an emergency. Be alert for passersby and especially children.

2. Allow no children on or near implement or tractor. Allow no riders on tractor or implement. Falling off can cause serious injury or death from being runover by tractor or mower or contact with Flail Mower Blades.

3. Operate only with tractor having Roll-Over Protective Structure (ROPS) and with seatbelt fastened securely and snugly to prevent injury and possible death from falling off or tractor overturn. Personal Protective Equipment such as Hard Hat, Safety Glasses, Safety Shoes, and Ear Plugs are recommended.

4. Block up or support raised machine and all lifted components securely before putting hands or feet under or working underneath any lifted component to prevent crushing injury or death from sudden dropping or inadvertent operation of controls. Make certain that area is clear before lowering or folding.

5. Before transporting, put Lift Lever in detent or full-lift position. Install Transport Safety Devices securely on folding implements. Slow down when turning and on hillsides.

- Install **Restrictor in folding circuit to slow down lowering and unfolding if action is faster than is desirable.

6. Make certain that SMV sign, Warning Lights, and Reflectors are clearly visible. Follow local traffic codes.

7. Never operate with Flail Mower or Folding Section raised if passersby, bystanders or traffic are in the area to reduce possibility of injury or death form objects thrown by Blades under Shields or implement structure.

8. Before dismounting, secure flail mower in transport position or lower to ground.

- Put tractor in park or set brake, disengage PTO, stop engine, remove key, and wait until noise of rotation has ceased to prevent entanglement in rotating parts which may cause injury or death.
- Never mount or dismount a moving vehicle. Crushing from runover may cause injury or death.

5. TRANSPORT SAFELY, LOCK UP.

6. USE SMV, LIGHTS, & REFLECTORS.

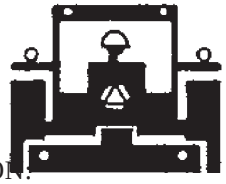

7. DO NOT OPERATE WITH MOWER OR WING RAISED.

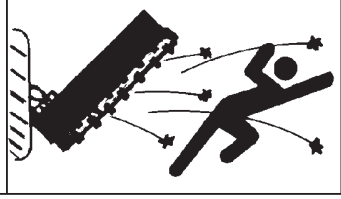

8. DO NOT MOUNT OR DISMOUNT WHILE MOVING.

002369

WARRANTY INFORMATION:

Read and understand the complete Warranty Statement found in this Manual. Fill out the Warranty Registration Form in full and return it within 30 Days. Make certain the Serial Number of the Machine is recorded on the Warranty Card and on the Warranty Form that you retain. The use of "will-fit" parts will void your warranty and can cause catastrophic failure with possible injury or death.

PARTS SECTION

PARTS ORDERING GUIDE

The following instructions are offered to help eliminate needless delay and error in processing purchase orders for the equipment in this section.

1. The Parts Section is prepared in logical sequence and grouping of parts that belong to the basic machine featured in this manual. Part Numbers and Descriptions are given to help locate the parts and quantities required.

2. The Purchase Order must include the name and address of the person or organization ordering the parts, who should be charged, and if possible, the serial number of the machine for which the parts are ordered.

3. The Purchase Order must clearly list the quantity of each part, the complete and correct part number, and the basic name of the part.

4. The Manufacturer reserves the right to substitute parts where applicable.

5. Some parts are unlisted items which are special production items not normally stocked and are subject to special handling. Request a quotation for such parts before sending a Purchase Order.

6. The Manufacturer reserves the right to change prices without prior notice.

NOTE: Please refer to The Safety Section in the front of this Manual for the proper Part Number when ordering Replacement Safety Decals.

For maximum safety and to guarantee optimum product reliability, always use genuine Alamo Group Parts. The use of inferior replacement parts may cause premature or catastrophic failure which could result in serious injury or death. Direct any questions regarding parts to:

1020 South Sangamon Ave.
Gibson City, IL 60936
800-446-5158
Email: parts@servis-rhino.com

©2005 Alamo Group Inc.

PART NAME INDEX

ARMS & WHEELS & ACCESSORIES - RDF12 4
ARMS & WHEELS 55 & ACCESSORIES - RDF14 6
ARMS & WHEELS 55 & ACCESSORIES - RDF16 9
CENTER SECTION & DRAWBAR - RDF12 11
CENTER SECTION & DRAWBAR - RDF14 16 14
CYLINDER WITH VALVE & ACCESSORIES - RDF12 18
CYLINDER WITH VALVE & ACCESSORIES - RDF14 16 20
FRONT HYDRAULIC COMPONENTS (FRONT) - RDF12 22
FRONT HYDRAULIC COMPONENTS (FRONT) - RDF14 16 24
FRONT HYDRAULIC COMPONENTS (REAR) - RDF12 26
FRONT HYDRAULIC COMPONENTS (REAR) - RDF14 16 28
FRONT SECTION & DRAWBAR - RDF12 30
FRONT SECTION & DRAWBAR - RDF14 16 32
OPTIONAL KIT FOR 60 - RDF14 35
OPTIONAL KIT FOR 60 - RDF16 37
RAKE WHEELS - OPTIONAL - RDF12 39
REAR PART - RDF14 & RDF16 41
REAR SECTION & DRAWBAR - RDF12 44
REAR SECTION & DRAWBAR - RDF14 16 46
THIRD WHEEL KIT - RDF12 48
WHEELS - RDF12 50

RDF12-14-16

ARMS & WHEELS & ACCESSORIES - RDF12

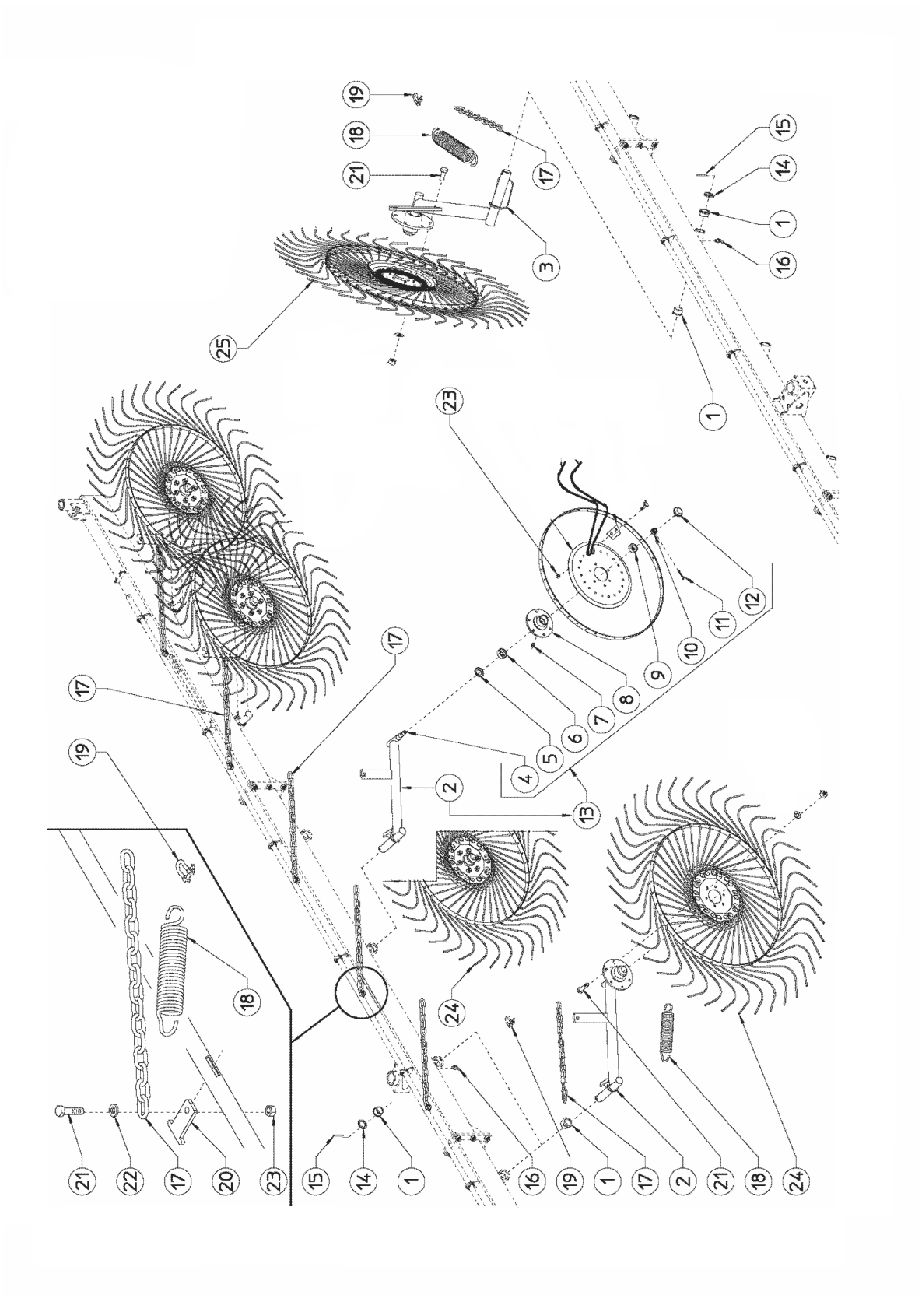

RDF12-14-16

Continued...

ITEM	PART NO.	QTY.	DESCRIPTION
1	3637520	20	BUSHING
2	3630283	5	RH ARMS W/HUB
3	3630284	5	LH ARMS W/HUB
4	3637509	10	PIN
5	3736800	10	DUST COVER
6	3736000	10	BEARING 30205
7	2568408	10	GREASE NIPPLE M8
8	3637504	10	HUB
9	3736001	10	BEARING 30204
10	700728C	10	SLOTTED NUT M18X1,5
11	70477	10	SPLIT PIN ø3X30 DIN 94
12	3736700	10	CAP
13	3630100	10	HUB ASSY
14	3638403	10	WASHER ø35-50X5
15	703516W	10	SPLIT PIN ø8X50 DIN 1481
16	3668409	10	GREASE NIPPLE M6X45°
17	3666256	10	CHAINE
18	3637422	10	SPRING
19	3668415	10	"D" SACKLES
20	3637548	10	SUPPORT PLATE
21	61368C8	70	SCREW M10X25 DIN 933 8.8
22	3698425	10	WASHER ø11-30X2,5 UNI 6593
23	00765676	210	NUT M10 DIN 980

RDF12-14-16

©2016 Alamo Group Inc.

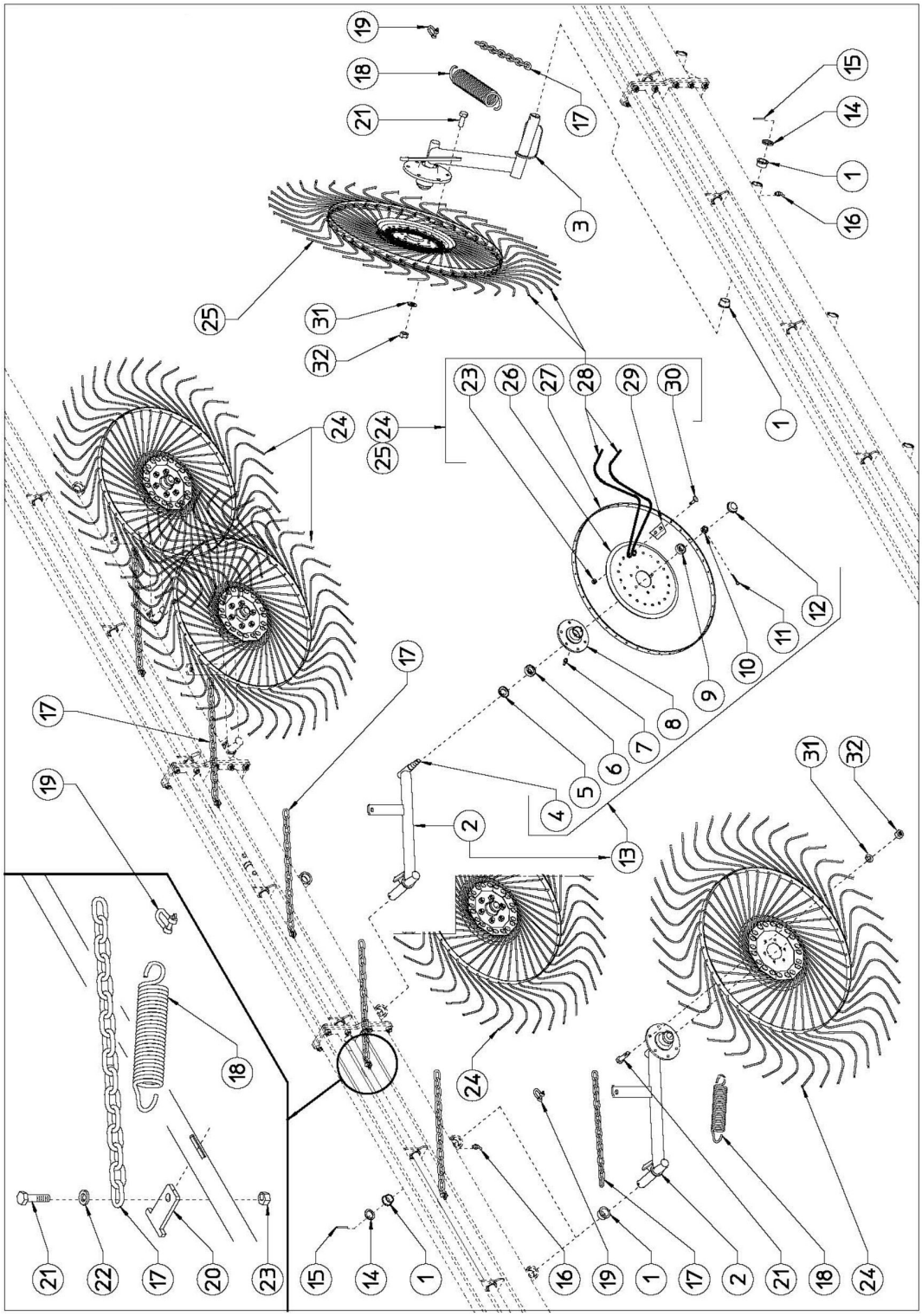

16

RDF12-14-16

Continued...

ITEM	PART NO.	QTY.	DESCRIPTION
1	3637520	28	BUSHING
	3637520	28	BUSHING
2	3630283	7	RH ARMS
	3630283	7	RH ARMS
3	3630284	7	LH ARMS
	3630284	7	LH ARMS
4	3637509	14	PIN
	3637509	14	PIN
5	3736800	14	DUST COVER
	3736800	14	DUST COVER
6	3736000	14	BEARING 30205
	3736000	14	BEARING 30205
7	2568408	14	GREASE NIPPLE M8
	2568408	14	GREASE NIPPLE M8
8	3637504	14	HUB
	3637504	14	HUB
9	3736001	14	BEARING 30204
	3736001	14	BEARING 30204
10	700728C	14	SLOTTED NUT M18X1,5
	700728C	14	SLOTTED NUT M18X1,5
11	70477	14	SPLIT PIN ø3X30 DIN 94
	70477	14	SPLIT PIN ø3X30 DIN 94
12	3736700	14	CAP
	3736700	14	CAP
13	3630100	14	HUB ASSY
	3630100	14	HUB ASSY
14	3638403	14	WASHER ø35-50X5
	3638403	14	WASHER ø35-50X5
15	703516W	14	SPLIT PIN ø8X50 DIN 1481
	703516W	14	SPLIT PIN ø8X50 DIN 1481
16	3668409	14	GREASE NIPPLE M6X45°
	3668409	14	GREASE NIPPLE M6X45°
17	3666256	14	CHAINE
	3666256	14	CHAINE
18	3637422	14	
	3637422	14	
19	3668415	14	"D" SACKLES
	3668415	14	"D" SACKLES
20	6637548	14	SUPPORT
	6637548	14	SUPPORT
21	6136C8	98	SCREW M10X25 DIN 933 8.8

RDF12-14-16

©2016 Alamo Group Inc.

Continued...

ITEM	PART NO.	QTY.	DESCRIPTION
	6136C8	98	SCREW M10X25 DIN 933 8.8
22	3698425	14	WASHER ø11-30X2,5 UNI 6593
	3698425	14	WASHER ø11-30X2,5 UNI 6593
23	00765676	98	NUT M10 DIN 980
	00765676	98	NUT M10 DIN 980

RDF12-14-16

©2016 Alamo Group Inc.

BLANK INTENTIONALLY

©2016 Alamo Group Inc.

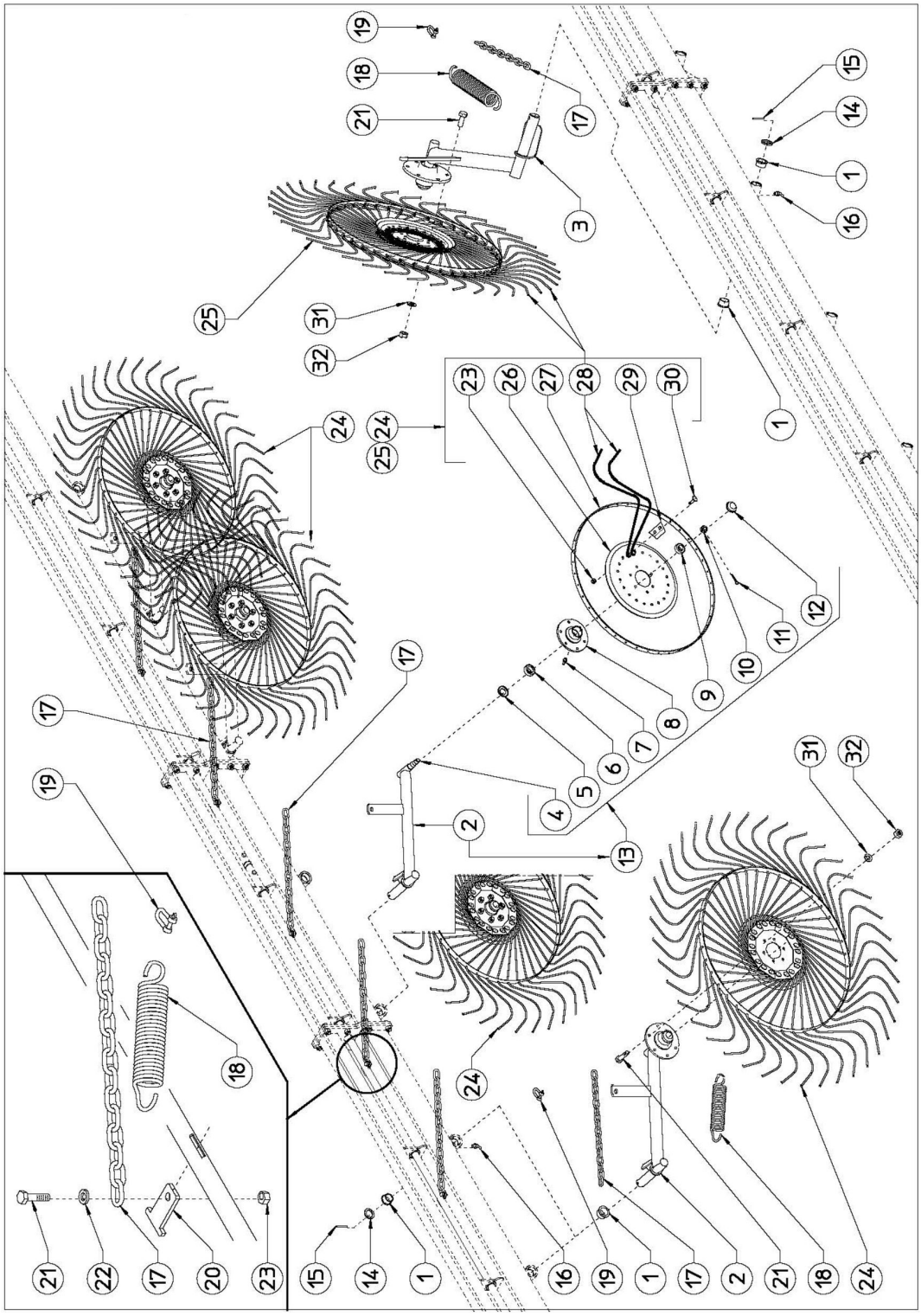

16

RDF12-14-16

Continued...

ITEM	PART NO.	QTY.	DESCRIPTION
1	3637520	32	BUSHING
2	3630283	8	RH ARMS
3	3630284	8	LH ARMS
4	3637509	16	PIN
5	3736800	16	DUST COVER
6	3736000	16	BEARING 30205
7	2568408	16	GREASE NIPPLE M8
8	3637504	16	HUB
9	3736001	16	BEARING 30204
10	700728C	16	SLOTTED NUT M18X1,5
11	70477	16	SPLIT PIN ø3X30 DIN 94
12	3736700	16	CAP
13	3630100	16	HUB ASSY
14	3638403	16	WASHER ø35-50X5
15	703516W	16	SPLIT PIN ø8X50 DIN 1481
16	3668409	16	GREASE NIPPLE M6X45°
17	3666256	16	CHAINE
18	3637422	16	
19	3668415	16	"D" SACKLES
20	6637548	16	SUPPORT
21	6136C8	112	SCREW M10X25 DIN 933 8.8
22	3698425	16	WASHER ø11-30X2,5 UNI 6593
23	00765676	112	NUT M10 DIN 980

©2016 Alamo Group Inc.

CENTER SECTION & DRAWBAR - RDF12

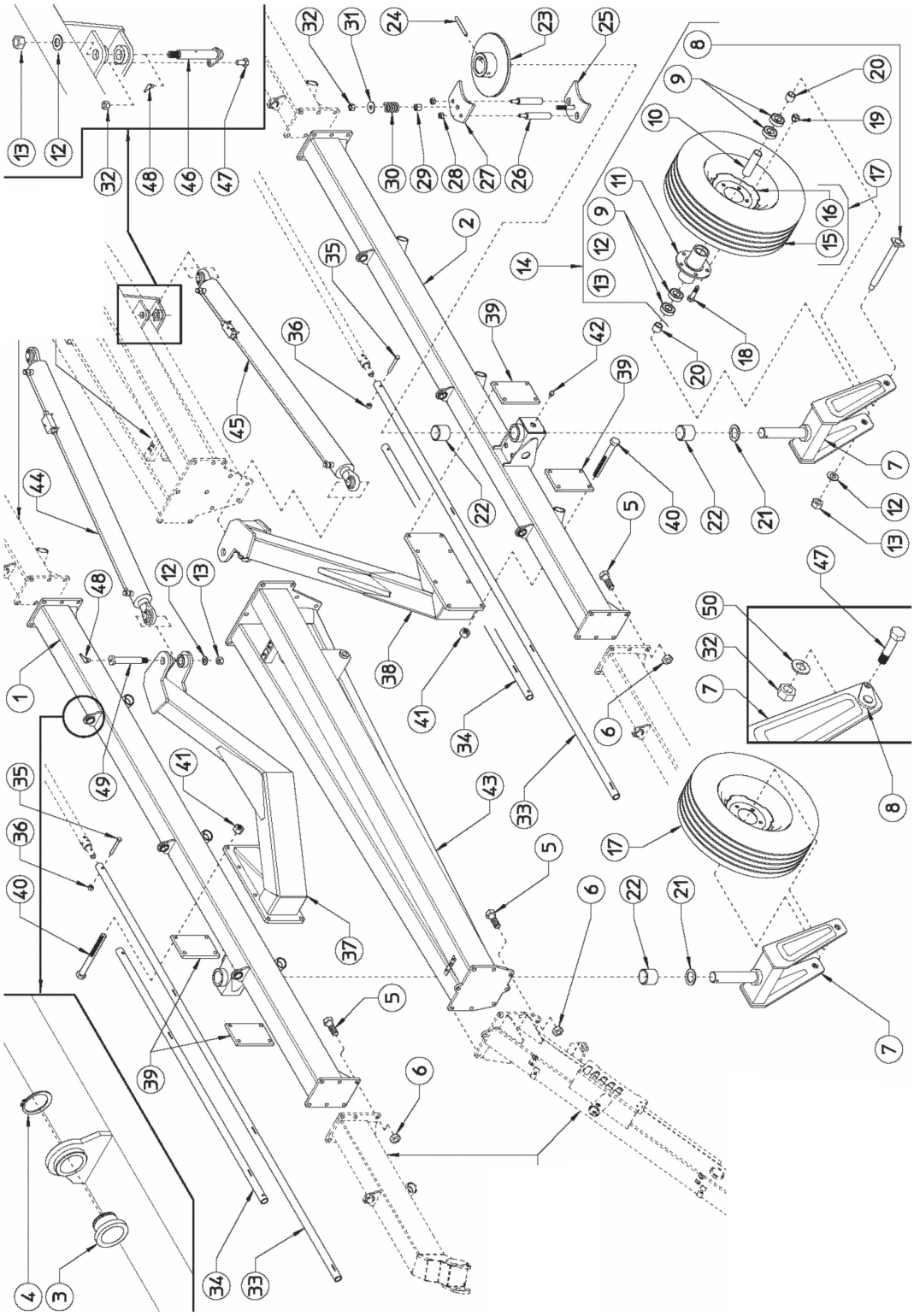

RDF12-14-16

Continued...

ITEM	PART NO.	QTY.	DESCRIPTION
1	3630268	1	RH SECTION (3 WHEELS)
2	3630269	1	LH SECTION (3 WHEELS)
3	3666780	6	NYLON BUSH ø34,5
4	3698204	6	SNAP RING E42 DIN 471
5	00765901	20	SCREW M16X45 DIN 933 8.8
6	9143007	20	NUT M16 DIN 980
7	3630270	2	WHEEL SUPPORT
8	3630271	2	PIN ø30
9	3636003	8	BEARING 6206 2RS
10	3637537	2	SPACER
11	3637538	2	HUB
12	3638409	6	WASHER ø23-50X4
13	700910C	6	NUT M22 DIN 980
14	3660127	2	HUB ASSY
15	3637800	2	TIRE 205-75
16	3637600	2	WHEEL RIM 6JX15
17	3630103	2	COMPLETE WHEEL 205/75-R15
18	61895C8	10	SCREW M16X1,5 X 40 DIN 961
19	3638406	10	NUT M16X1,5
20	3667517	4	SPACER
21	3668401	2	SHIM ø50-75X5
22	3637521	4	NYLON BUSH ø50-60X50
23	3630229	2	BRAKE FLANGE
24	00756934	2	SPRING PIN ø10X80 DIN 1481
25	3630272	2	BRAKE COUNTERPLATE
26	3637539	4	PIN ø20
27	3637540	2	BRAKE PLATE
28	00765676	4	NUT M10 DIN 980
29	3637541	2	SPACER
30	3637423	2	SPRING ø5-ø30X45
31	3668440	2	WASHER ø12-36X4
32	00772648	6	NUT M12 DIN 980
33	3637542	2	PIPE ø33,7 L.2415-95,08" (RDF12 ONLY)
35	61053C8	2	SCREW M8X45 DIN 931 8.8
36	70093C	2	NUT M8 DIN 980
37	3630273	1	RH ARM
38	3630274	1	LH ARM
39	3637543	4	COUNTERPLATE
40	02967283	16	SCREW M14X140 DIN 931 8.8
41	70096C	16	NUT M14 DIN 980
42	2568408	2	GREASE NIPPLE M8

RDF12-14-16

©2016 Alamo Group Inc.

Continued...

ITEM	PART NO.	QTY.	DESCRIPTION
43	3630275	1	DRAWBAR
44	3697131	1	RH CYLINDER WITH VALVE
45	3697132	1	LH CYLINDER WITH VALVE
46	3630276	2	PIN ø30
47	02979380	4	SCREW M12X35 DIN 933 8.8
48	3668409	4	GREASE NIPPLE M6X45°
49	3637544	2	PIN ø30
50	701513C	2	WASHER ø13 DIN 125A

RDF12-14-16

©2016 Alamo Group Inc.

BLANK INTENTIONALLY

©2016 Alamo Group Inc.

CENTER SECTION & DRAWBAR - RDF14 16

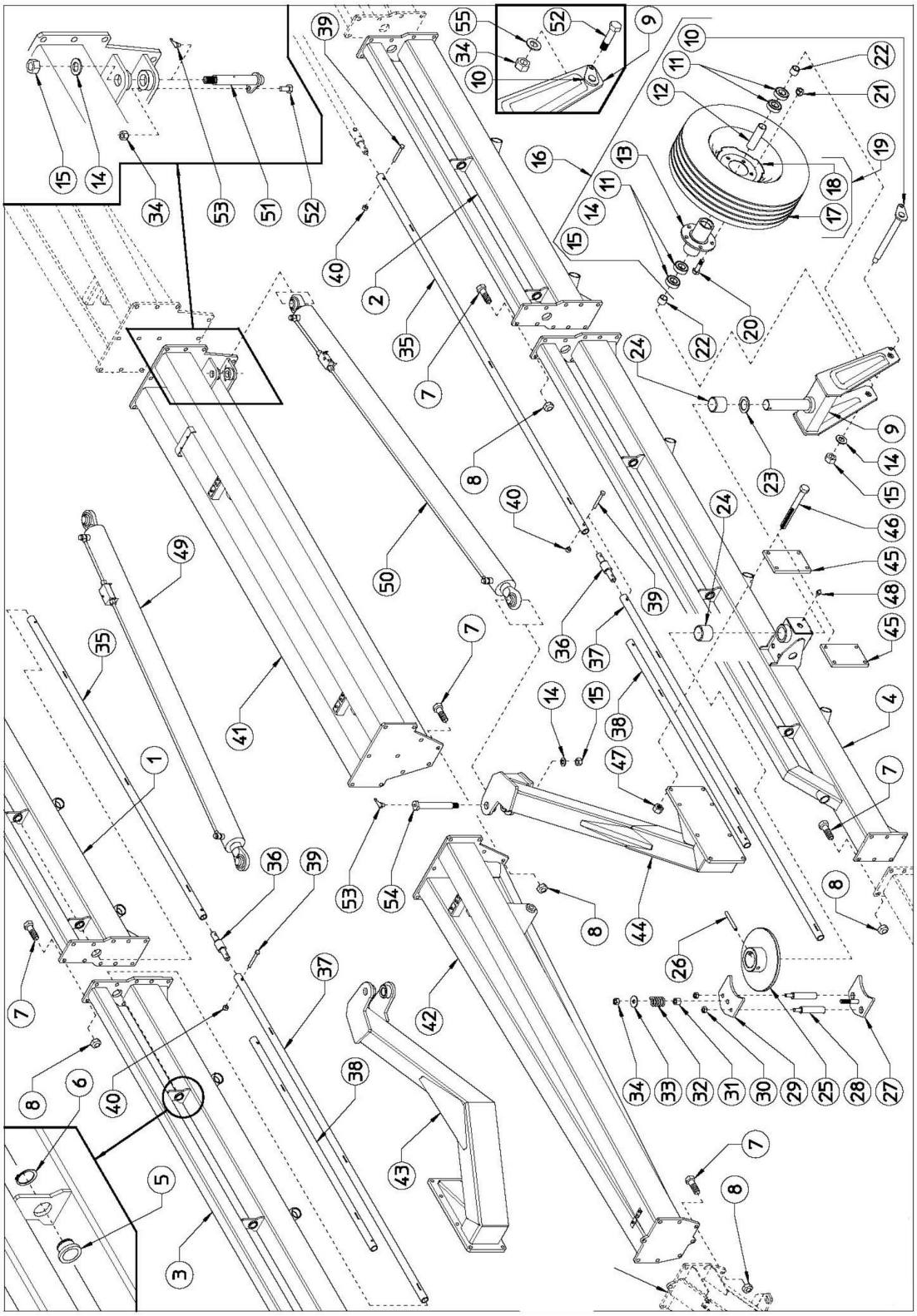

RDF12-14-16

Continued...

ITEM	PART NO.	QTY.	DESCRIPTION
1	3630294	1	RH SECTION (2 WHEELS)
	3630294	1	RH SECTION (2 WHEELS)
2	3630295	1	LH SECTION (2 WHEELS)
	3630295	1	LH SECTION (2 WHEELS)
3	3630296	1	RH SECTION (3 WHEELS)
	3630296	1	RH SECTION (3 WHEELS)
4	3630297	1	LH SECTION (3 WHEELS)
	3630297	1	LH SECTION (3 WHEELS)
5	3666780	10	NYLON BUSH ø34,5
	3666780	10	NYLON BUSH ø34,5
6	3698204	10	SNAP RING E42 DIN 471
	3698204	10	SNAP RING E42 DIN 471
7	00765901	50	SCREW M16X45 DIN 933 8.8
	00765901	50	SCREW M16X45 DIN 933 8.8
8	9143007	50	NUT M16 DIN 980
	9143007	50	NUT M16 DIN 980
9	3630270	2	WHEEL SUPPORT
	3630270	2	WHEEL SUPPORT
10	3630271	2	PIN ø30
	3630271	2	PIN ø30
11	3636003	8	BEARING 6206 2RS
	3636003	8	BEARING 6206 2RS
12	3637537	2	SPACER
	3637537	2	SPACER
13	3637538	2	HUB
	3637538	2	HUB
14	3638409	6	WASHER ø23-50X4
	3638409	6	WASHER ø23-50X4
15	700910C	6	NUT M22 DIN 980
	700910C	6	NUT M22 DIN 980
16	3660127	2	HUB ASSY
	3660127	2	HUB ASSY
17	3637800	2	TIRE 205-75
	3637800	2	TIRE 205-75
18	3637600	2	WHEEL RIM 6JX15
	3637600	2	WHEEL RIM 6JX15
19	3630103	2	COMPLETE WHEEL 205/75-R15
	3630103	2	COMPLETE WHEEL 205/75-R15
20	61895C8	10	SCREW M16X1,5 X 40 DIN 961
	61895C8	10	SCREW M16X1,5 X 40 DIN 961
21	3638406	10	NUT M16X1,5

©2016 Alamo Group Inc.

Continued...

ITEM	PART NO.	QTY.	DESCRIPTION
	3638406	10	NUT M16X1,5
22	3667517	4	SPACER
	3667517	4	SPACER
23	3668401	2	SHIM ø50-75X5
	3668401	2	SHIM ø50-75X5
24	3637521	4	NYLON BUSH ø50-60X50
	3637521	4	NYLON BUSH ø50-60X50
25	3630229	2	BRAKE FLANGE
	3630229	2	BRAKE FLANGE
26	00756934	2	SPRING PIN ø10X80 DIN 1481
	00756934	2	SPRING PIN ø10X80 DIN 1481
27	3630272	2	BRAKE COUNTERPLATE
	3630272	2	BRAKE COUNTERPLATE
28	3637539	4	PIN ø20
	3637539	4	PIN ø20
29	3637540	2	BRAKE PLATE
	3637540	2	BRAKE PLATE
30	00765676	4	NUT M10 DIN 980
	00765676	4	NUT M10 DIN 980
31	3637541	2	SPACER
	3637541	2	SPACER
32	3637423	2	SPRING ø5-ø30X45
	3637423	2	SPRING ø5-ø30X45
33	3668440	2	WASHER ø12-36X4
	3668440	2	WASHER ø12-36X4
34	00772648	6	NUT M12 DIN 980
	00772648	6	NUT M12 DIN 980
35	3637533	2	PIPE ø33,7 L.2515-99"
	3637533	2	PIPE ø33,7 L.2515-99"
36	3637534	2	PIN ø25-35
	3637534	2	PIN ø25-35
37	3637542	2	PIPE ø33,7 L.2415-95,08" (MK16 ONLY)
	3637542	2	PIPE ø33,7 L.2415-95,08" (MK16 ONLY)
38	3637554	2	PIPE ø33,7 L.1670-65,75" (MK14 ONLY)
	3637554	2	PIPE ø33,7 L.1670-65,75" (MK14 ONLY)
39	61053C8	6	SCREW M8X45 DIN 931 8.8
	61053C8	6	SCREW M8X45 DIN 931 8.8
40	70093C	6	NUT M8 DIN 980
	70093C	6	NUT M8 DIN 980
41	3630298	1	DRAWBAR
	3630298	1	DRAWBAR

©2016 Alamo Group Inc.

Continued...

ITEM	PART NO.	QTY.	DESCRIPTION
42	3630275	1	DRAWBAR
	3630275	1	DRAWBAR
43	3630273	1	RH ARM
	3630273	1	RH ARM
44	3630274	1	LH ARM
	3630274	1	LH ARM
45	3637543	4	COUNTERPLATE
	3637543	4	COUNTERPLATE
46	02967283	16	SCREW M14X140 DIN 931 8.8
	02967283	16	SCREW M14X140 DIN 931 8.8
47	70096C	16	NUT M14 DIN 980
	70096C	16	NUT M14 DIN 980
48	2568408	2	GREASE NIPPLE M8
	2568408	2	GREASE NIPPLE M8
49	3697138	1	RH CYLINDER WITH VALVE
	3697138	1	RH CYLINDER WITH VALVE
50	3697139	1	LH CYLINDER WITH VALVE
	3697139	1	LH CYLINDER WITH VALVE
51	3630276	2	PIN ø30
	3630276	2	PIN ø30
52	02979380	4	SCREW M12X35 DIN 933 8.8
	02979380	4	SCREW M12X35 DIN 933 8.8
53	3668409	4	GREASE NIPPLE M6X45°
	3668409	4	GREASE NIPPLE M6X45°
54	3637544	2	PIN ø30
	3637544	2	PIN ø30
55	701513C	2	WASHER ø13 DIN 125A
	701513C	2	WASHER ø13 DIN 125A

©2016 Alamo Group Inc.

CYLINDER WITH VALVE & ACCESSORIES - RDF12

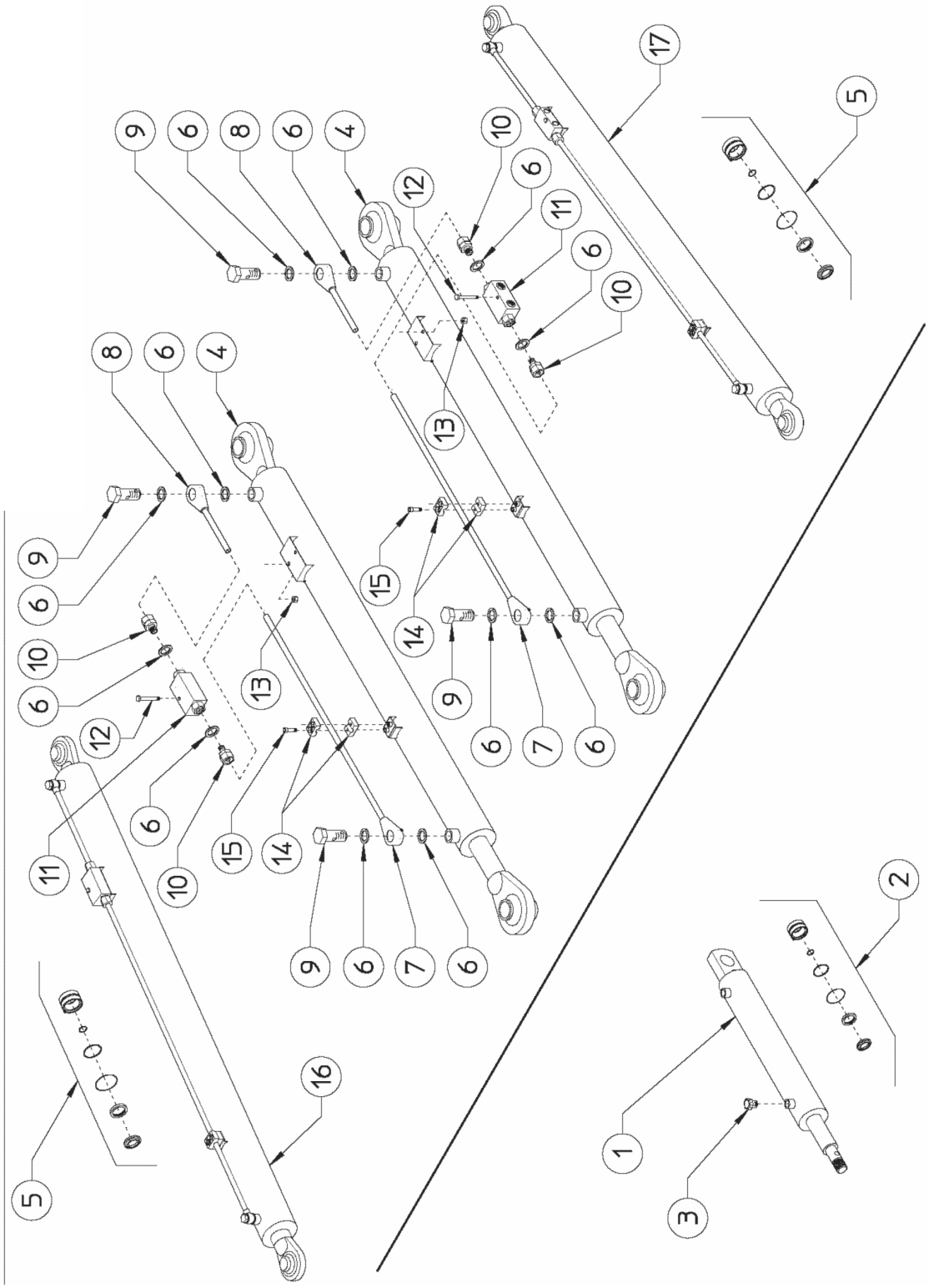

RDF12-14-16

Continued...

ITEM	PART NO.	QTY.	DESCRIPTION
1	3697130	2	CYLINDER ø50-30
2	3697135	2	SET OF GASKET ø50-30
3	3668630	2	PLUG 3/8"
4	3697136	2	CYLINDER ø70-45
5	3697137	2	SET OF GASKET ø70-45
6	3678416	12	WASHER ø3/8" BONDED
7	3667102	2	TUBE ø12 L.950-37,4"
8	3667103	2	TUBE ø12 L.200-7,87"
9	3637100	4	SCREW ø3/8"
10	3697114	4	FITTING 3/8"-ø12
11	3667109	2	LOCK VALVE 3/8"
12	61035C8	2	SCREW M6X40 DIN 931
13	70092C	2	NUT M6 DIN 980
14	3668450	4	HOSE COLLAR ø12
15	70786C8	4	SCREW M6X20 DIN 912
16	3697131	1	RH CYLINDER ø70-45 WITH VALVE
17	3697132	1	LH CYLINDER ø70-45 WITH VALVE

RDF12-14-16

©2016 Alamo Group Inc.

CYLINDER WITH VALVE & ACCESSORIES - RDF14 16

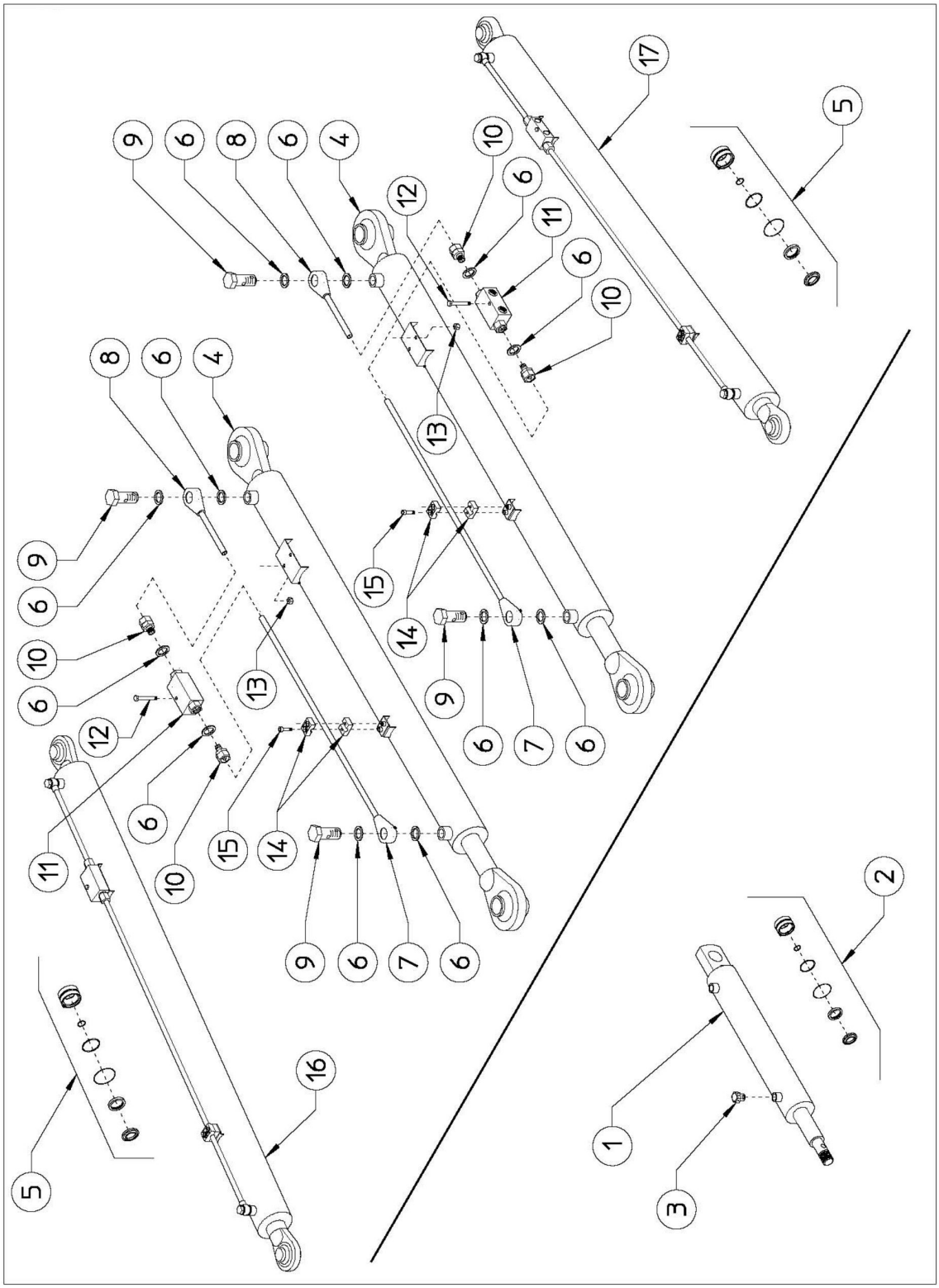

RDF12-14-16

CYLINDER WITH VALVE & ACCESSORIES - RDF14 16

Continued...

ITEM	PART NO.	QTY.	DESCRIPTION
1	3697130	2	CYLINDER ø50-30
2	3697135	2	SET OF GASKET ø50-30
3	3668630	2	PLUG 3/8"
4	3697140	2	CYLINDER ø80-50
5	3697141	2	SET OF GASKET ø80-50
6	3678416	12	WASHER ø3/8" BONDED
7	3667125	2	TUBE ø12 L.1500-59"
8	3667103	2	TUBE ø12 L.200-7,87"
9	3637100	4	SCREW ø3/8"
10	3667104	4	FITTING 3/8"-ø12
11	3667109	2	LOCK VALVE 3/8"
12	61035C8	2	SCREW M6X40 DIN 931
13	70092C	2	NUT M6 DIN 980
14	3668450	4	HOSE COLLAR ø12
15	70786C8	4	SCREW M6X20 DIN 912
16	3697138	1	RH CYLINDER ø80-50 WITH VALVE
17	3697139	1	LH CYLINDER ø80-50 WITH VALVE

©2016 Alamo Group Inc.

FRONT HYDRAULIC COMPONENTS (FRONT) - RDF12

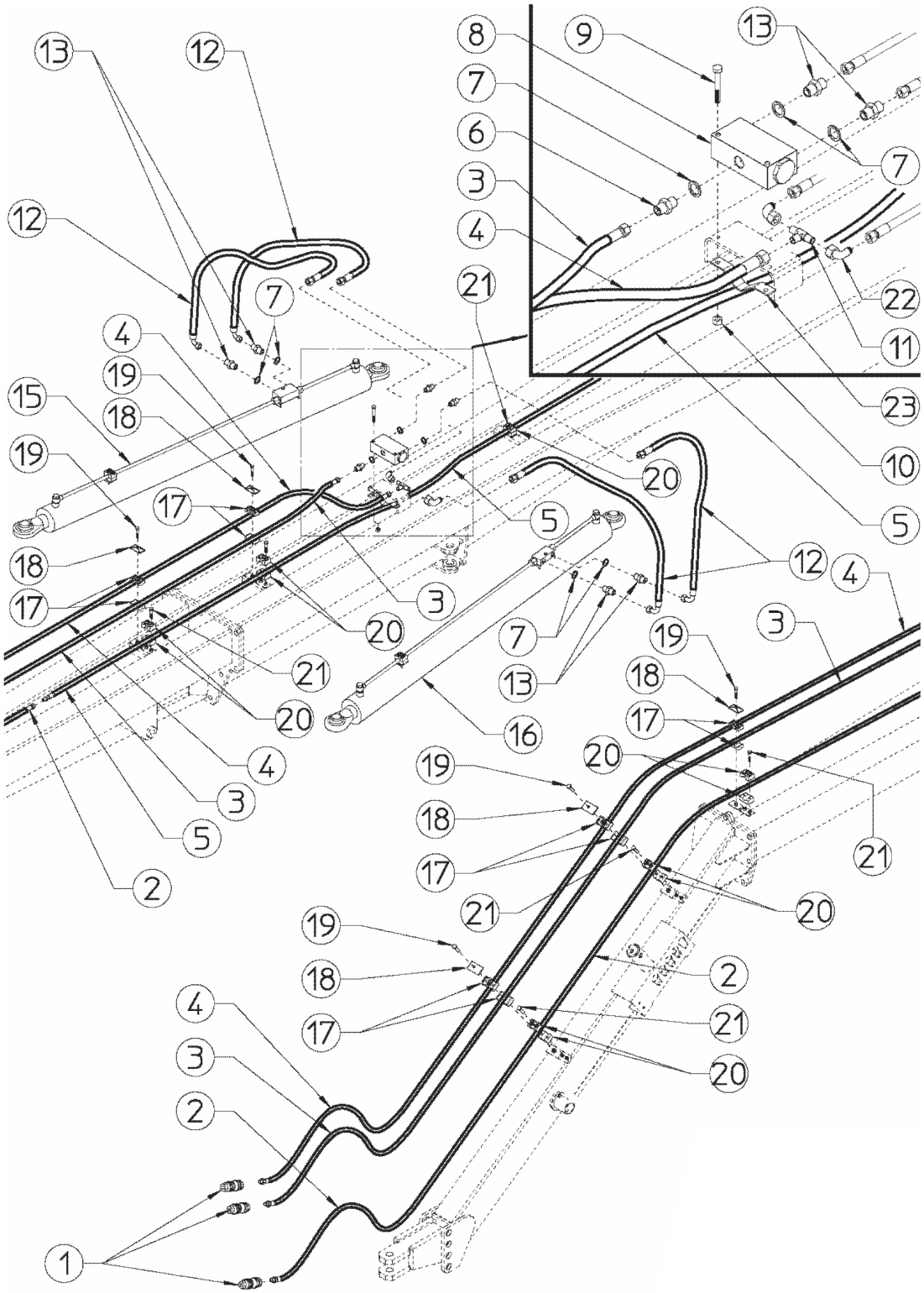

RDF12-14-16

Continued...

ITEM	PART NO.	QTY.	DESCRIPTION
1	2381	3	RAPID COUPLINGS 1/2" NPTM
2	3667256	1	HOSE 3/8" L.4550-179,13" 1/2" NPTF- M JIC 3/4"
3	3667257	1	HOSE 1/2" L.6500-255,91" 1/2" NPTF- F JIC 7/8"
4	3667258	1	HOSE 1/2" L.6600-259,84" 1/2" NPTF- F JIC 3/4"
5	3667259	1	HOSE 3/8" L.4300-169,29" M JIC 3/4" - F JIC 3/4"
6	3697133	1	NIPPLE JIC 7/8" - 3/8" GAS
7	3678416	7	WASHER ø3/8" BONDED
8	3667110	1	FLOW DIVIDER 3/8"
9	61039C8	2	SCREW M6X60 DIN 931
10	70092C	2	NUT M6 DIN 980
11	2437107	1	"T" FITTING - MALE JIC 3/4"
12	3667260	4	HOSE 3/8" L.750-29,53" F JIC 3/4" - F90° JIC 3/4"
13	3697134	6	NIPPLE 3/8" GAS - JIC 3/4"
15	3697131	1	RH CYLINDER ø70-45 WITH VALVE
16	3697132	1	LH CYLINDER ø70-45 WITH VALVE
17	3668448	10	DOUBLE HOSE COLLAR ø22-22
18	3668449	5	LOCK
19	00762533	5	SCREW M8X45 DIN 933
20	3668424	12	HOSE COLLAR ø18
21	70788C8	12	SCREW M6X25 DIN 912
22	11676	2	FITTING 90° M ¾” JIC – F ¾” JIC
23	3637552	1	HOSE SUPPORT

RDF12-14-16

©2016 Alamo Group Inc.

FRONT HYDRAULIC COMPONENTS (FRONT) - RDF14 16

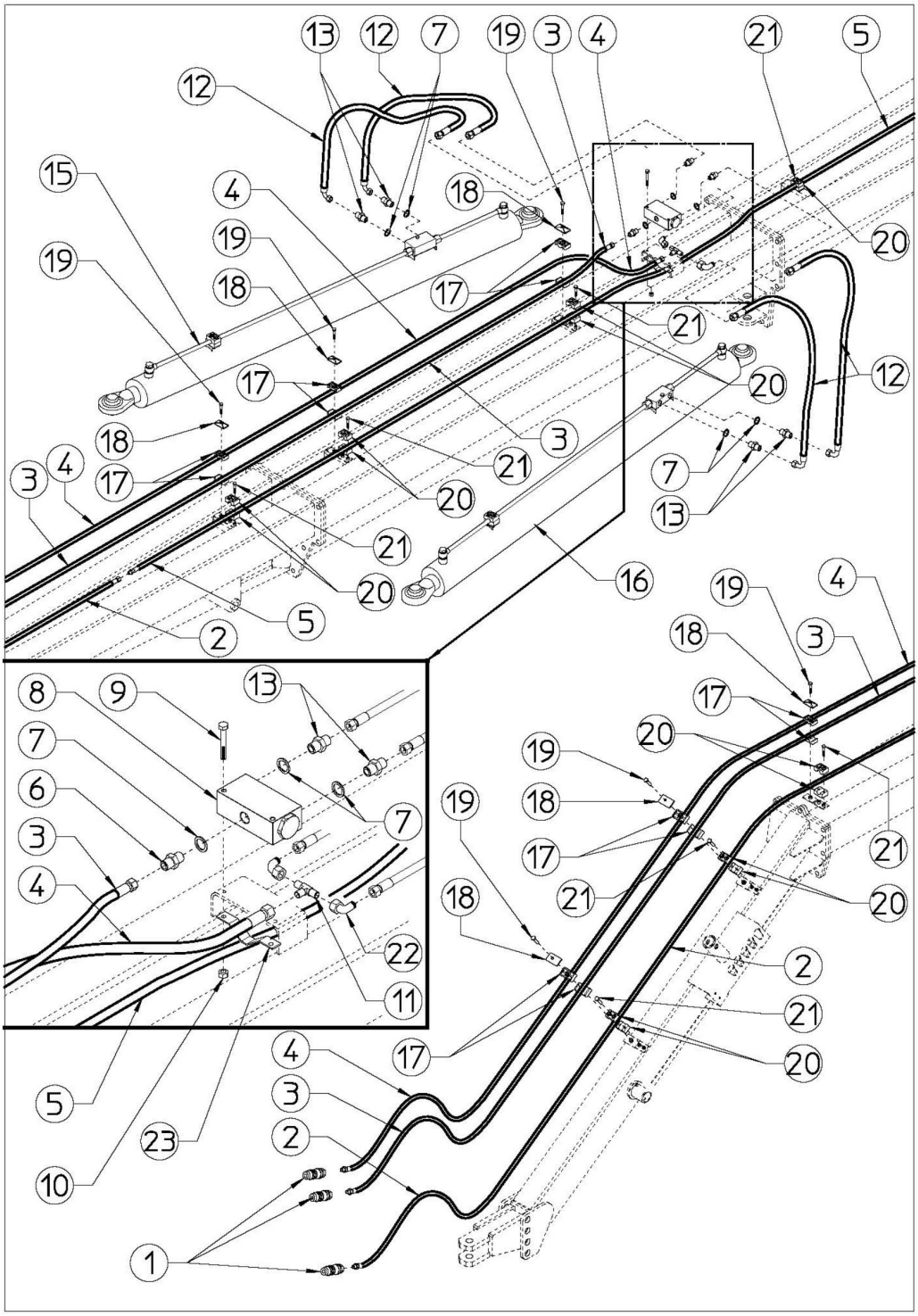

RDF12-14-16

Continued...

ITEM	PART NO.	QTY.	DESCRIPTION
1	2381	3	RAPID COUPLINGS 1/2" NPTM
2	3667256	1	HOSE 3/8" L.4550-179,13" 1/2" NPTF- M JIC 3/4"
3	3667262	1	HOSE 1/2" L.7750-305,12" 1/2" NPTF- F JIC 7/8"
4	3667263	1	HOSE 1/2" L.7850-309,06" 1/2" NPTF- F JIC 3/4"
5	3667264	1	HOSE 3/8" L.6700-263,78" M JIC 3/4" - F JIC 3/4"
6	3697133	1	NIPPLE JIC 7/8" - 3/8" GAS
7	3678416	7	WASHER ø3/8" BONDED
8	3667110	1	FLOW DIVIDER 3/8"
9	61039C8	2	SCREW M6X60 DIN 931
10	70092C	2	NUT M6 DIN 980
11	2437107	1	"T" FITTING - MALE JIC 3/4"
12	3667260	4	HOSE 3/8" L.750-29,53" F JIC 3/4" - F90° JIC 3/4"
13	3697134	6	NIPPLE 3/8" GAS - JIC 3/4"
15	3697138	1	RH CYLINDER ø80-50 WITH VALVE
16	3697139	1	LH CYLINDER ø80-50 WITH VALVE
17	3668448	12	DOUBLE HOSE COLLAR ø22-22
18	3668449	6	LOCK
19	00762533	6	SCREW M8X45 DIN 933
20	3668424	14	HOSE COLLAR ø18
21	70788C8	14	SCREW M6X25 DIN 912
22	11676	2	FITTING 90° M3/4” JIC – F3/4” JIC
23	3637552	1	HOSE SUPPORT

RDF12-14-16

©2016 Alamo Group Inc.

FRONT HYDRAULIC COMPONENTS (REAR) - RDF12

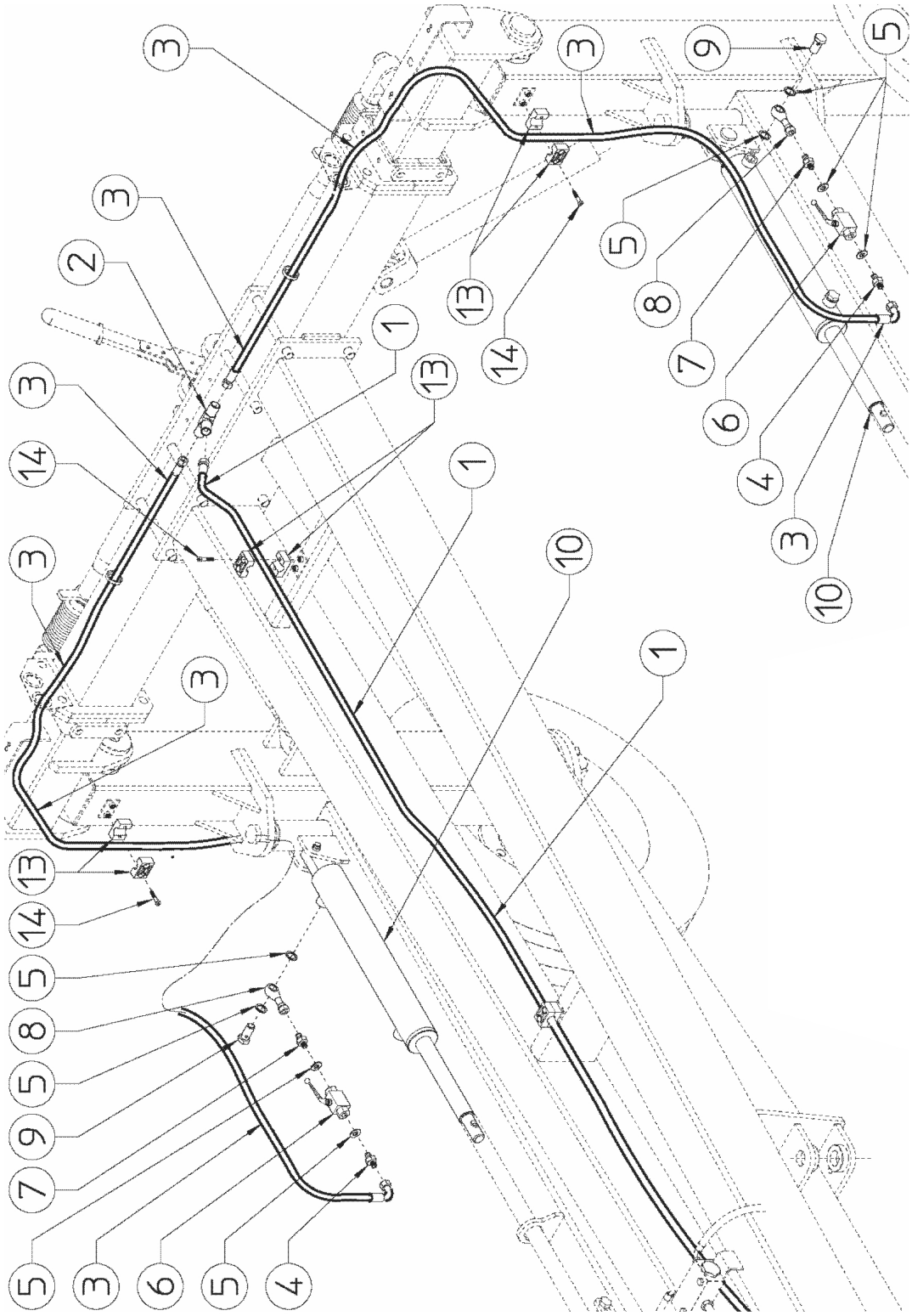

RDF12-14-16

Continued...

ITEM	PART NO.	QTY.	DESCRIPTION
1	3667259	1	HOSE 3/8" L.4300-169,29" M JIC 3/4" - F JIC 3/4"
2	2437107	1	"T" FITTING - MALE JIC 3/4"
3	3667261	2	HOSE 3/8" L.1840-72.44" F JIC 3/4" – F90° JIC 3/4"
4	3697134	2	NIPPLE 3/8" GAS - JIC 3/4"
5	3678416	8	WASHER ø3/8" BONDED
6	3667350	2	VALVE 3/8"
7	3667105	2	NIPPLE 3/8" GAS - 3/8"GAS
8	3697117	2	FITTING BANJO 3/8"
9	3637100	2	SCREW 3/8"
10	3697130	2	CYLINDER ø50-30
13	3668424	6	HOSE COLLAR ø18
14	70788C8	6	SCREW M6X25 DIN 912

RDF12-14-16

©2016 Alamo Group Inc.

FRONT HYDRAULIC COMPONENTS (REAR) - RDF14 16

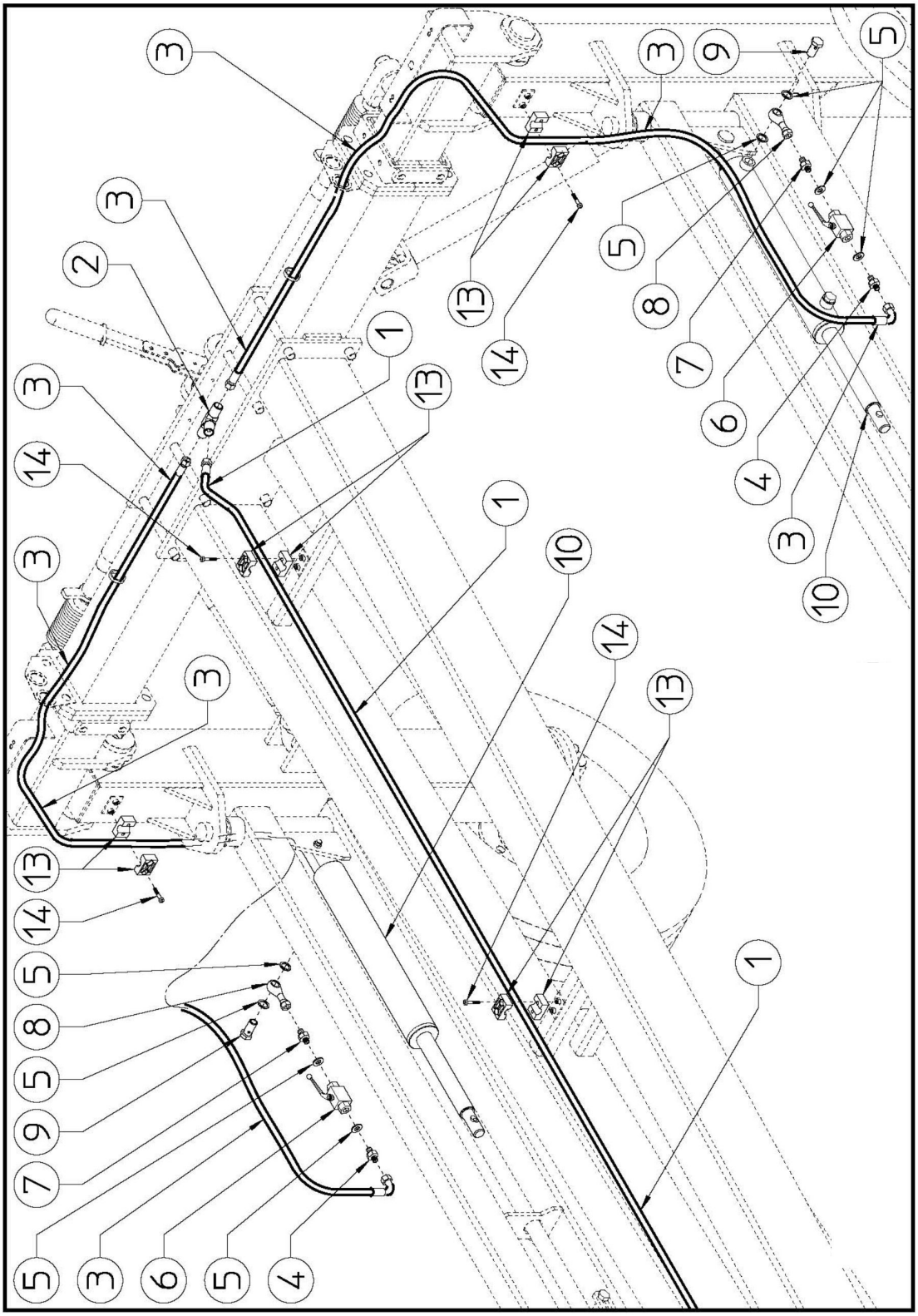

RDF12-14-16

Continued...

ITEM	PART NO.	QTY.	DESCRIPTION
1	3667264	1	HOSE 3/8" L.6700-263,78" M JIC 3/4" - F JIC 3/4"
2	2437107	1	"T" FITTING - MALE JIC 3/4"
3	3667261	2	HOSE 3/8" L.1840-72.44" F JIC 3/4" - F90° JIC 3/4"
4	3697134	2	NIPPLE 3/8" GAS - JIC 3/4"
5	3678416	8	WASHER ø3/8" BONDED
6	3667350	2	VALVE 3/8"
7	3667105	2	NIPPLE 3/8" GAS - 3/8"GAS
8	3697117	2	FITTING BANJO 3/8"
9	3637100	2	SCREW 3/8"
10	3697130	2	CYLINDER ø50-30
13	3668424	8	HOSE COLLAR ø18
14	70788C8	8	SCREW M6X25 DIN 912

©2016 Alamo Group Inc.

FRONT SECTION & DRAWBAR - RDF12

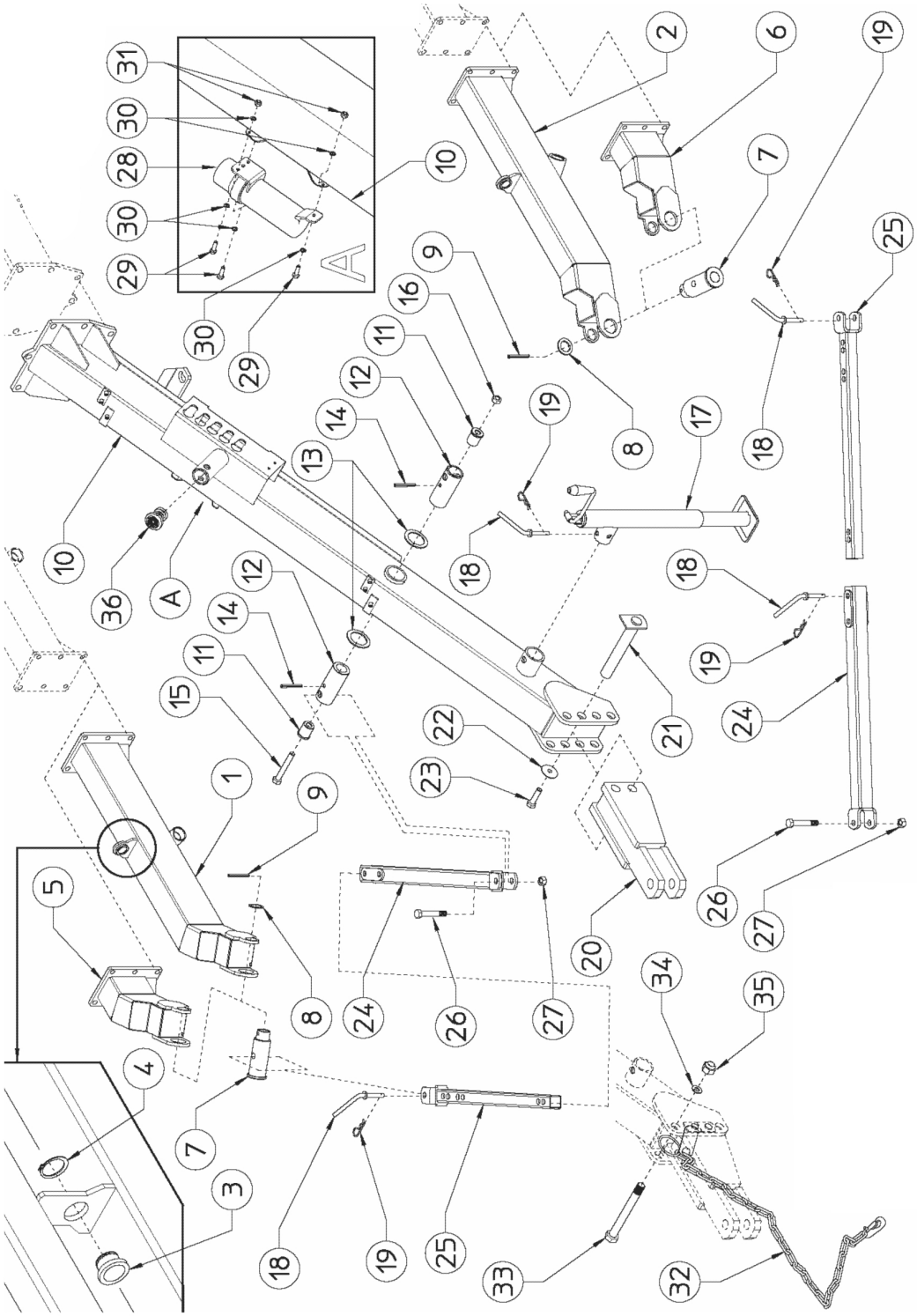

RDF12-14-16

Continued...

ITEM	PART NO.	QTY.	DESCRIPTION
1	3630277	1	RH SECTION (1 WHEEL)
2	3630278	1	LH SECTION (1 WHEEL)
3	3666780	2	NYLON BUSH ø34,5
4	3698204	2	SNAP RING E42 DIN 471
7	3637545	2	BUSHING
8	3668446	2	SHIM ø39-50X3
9	703516W	2	SPRING PIN ø8X50 DIN 1481
10	3630279	1	FRONT DRAWBAR
11	3637546	2	BUSHING
12	3637547	2	BUSHING
13	3668447	2	SHIM ø50,5-70X3
14	703519W	2	SPRING PIN ø8X70 DIN 1481 PLATED
15	610712C8	1	SCREW M12X100 DIN 931 8.8
16	00772648	1	NUT M12 DIN 980
17	3668624	1	PARKING STAND
18	3638602	5	PIN ø15
19	3638400	5	HAIRPIN ø3
20	3630280	1	TRACTOR HITCH
21	3660235	2	PIN ø25
22	3668440	2	WASHER ø12-36X4
23	00762395	2	SCREW M12X20 DIN 933 8.8
24	3630281	2	OUTER ARM
25	3630282	2	INNER ARM
26	00765902	2	SCREW M16X90 DIN 931 8.8
27	9143007	2	NUT M16 DIN 980
28	00776031	1	CANISTER
29	02969728	3	SCREW M6X20 DIN 933 8.8
30	70232C	6	WASHER ø6,6-18X2
31	70092C	3	NUT M6 DIN 980
32	00757908	1	SAFETY CHAIN
33	02967536	1	SCREW M22X150 DIN 931 8.8
34	701618C	1	SPRING WASHER ø23 SIMILAR TO DIN 127 B
35	6W238	1	NUT M22 DIN 934
36	3667577	1	PLUG

RDF12-14-16

©2016 Alamo Group Inc.

FRONT SECTION & DRAWBAR - RDF14 16

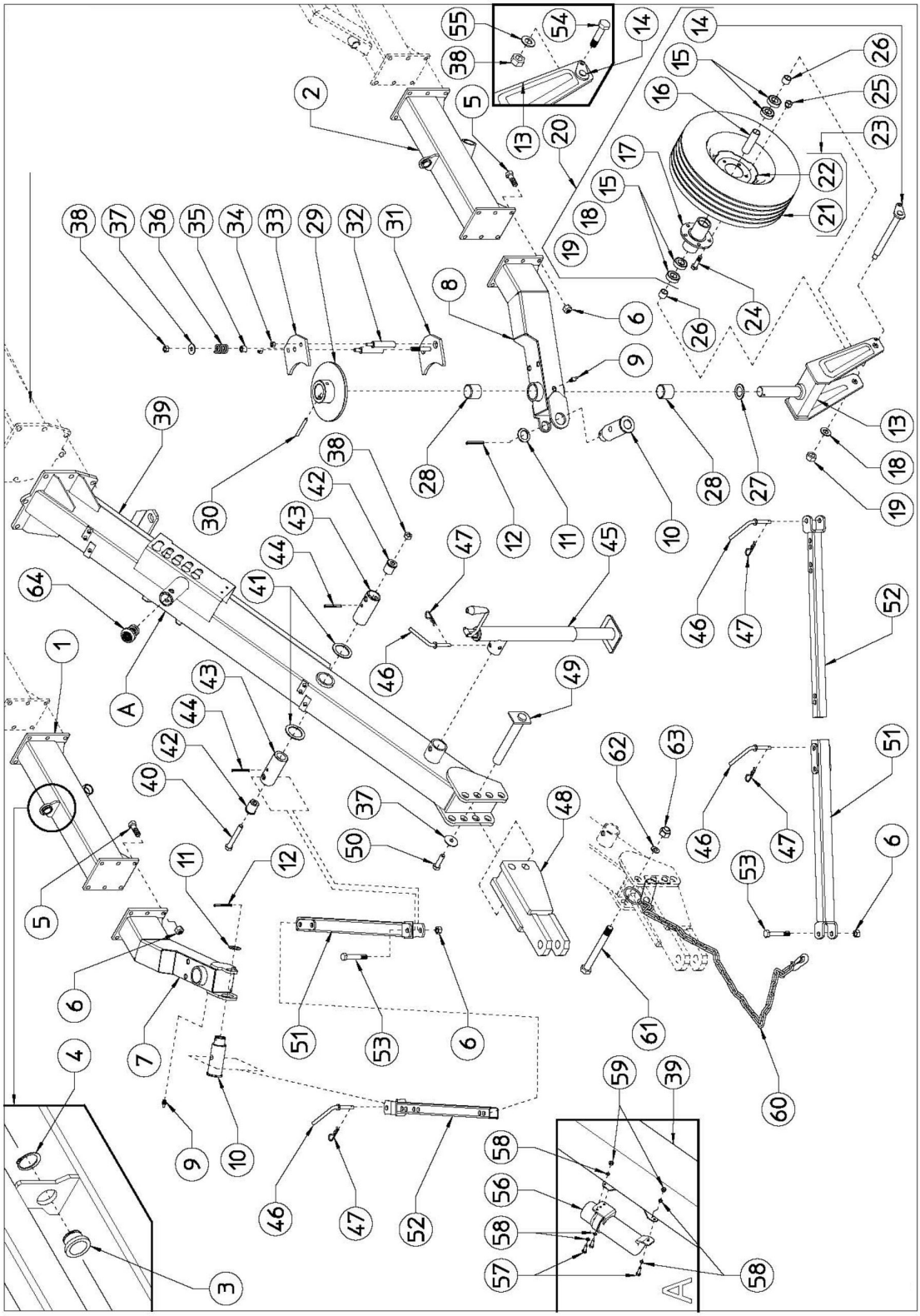

RDF12-14-16

Continued...

ITEM	PART NO.	QTY.	DESCRIPTION
1	3630299	1	RH SECTION (1 WHEEL)
2	3630300	1	LH SECTION (1 WHEEL)
3	3666780	2	NYLON BUSH ø34,5
4	3698204	2	SNAP RING E42 DIN 471
5	00765901	12	SCREW M16X45 DIN 933 8.8
6	9143007	14	NUT M16 DIN 980
7	3630301	1	RH WHEEL SUPPORT
8	3630302	1	LH WHEEL SUPPORT
9	2568408	2	GREASE NIPPLE M8
10	3637545	2	BUSHING
11	3668446	2	SHIM ø39-50X3
12	703516W	2	SPRING PIN ø8X50 DIN 1481
13	3630270	2	WHEEL SUPPORT
14	3630271	2	PIN ø30
15	3636003	8	BEARING 6206 2RS
16	3637537	2	SPACER
17	3637538	2	HUB
18	3638409	2	WASHER ø23-50X4
19	700910C	2	NUT M22 DIN 980
20	3660127	2	HUB ASSY
21	3637800	2	TIRE 205-75
22	3637600	2	WHEEL RIM 6JX15
23	3630103	2	COMPLETE WHEEL 205/75-R15
24	61895C8	10	SCREW M16X1,5 X 40 DIN 961
25	3638406	10	NUT M16X1,5
26	3667517	4	SPACER
27	3668401	2	SHIM ø50-75X5
28	3637521	4	NYLON BUSH ø50-60X50
29	3630229	2	BRAKE FLANGE
30	00756934	2	SPRING PIN ø10X80 DIN 1481
31	3630272	2	BRAKE COUNTERPLATE
32	3637539	4	PIN ø20
33	3637540	2	BRAKE PLATE
34	00765676	4	NUT M10 DIN 980
35	3637541	2	SPACER
36	3637423	2	SPRING ø5-ø30X45
37	3668440	4	WASHER ø12-36X4
38	00772648	5	NUT M12 DIN 980
39	3630279	1	FRONT DRAWBAR
40	610712C8	1	SCREW M12X100 DIN 931 8.8
41	3668447	2	SHIM ø50,5-70X3

RDF12-14-16

©2016 Alamo Group Inc.

Continued...

ITEM	PART NO.	QTY.	DESCRIPTION
42	3637546	2	BUSHING
43	3637547	2	BUSHING
44	703519W	2	SPRING PIN ø8X70 DIN 1481 PLATED
45	3668624	1	PARKING STAND
46	3638602	5	PIN ø15
47	3638400	5	HAIRPIN ø3
48	3630280	1	TRACTOR HITCH
49	3660235	2	PIN ø25
50	00762395	2	SCREW M12X20 DIN 933 8.8
51	3630281	2	OUTER ARM
52	3630282	2	INNER ARM
53	00765902	2	SCREW M16X90 DIN 931 8.8
54	02979380	2	SCREW M12X35 DIN 933 8.8
55	701513C	2	WASHER ø13 DIN 125A
56	00776031	1	CANISTER
57	02969728	3	SCREW M6X20 DIN 933 8.8
58	70232C	6	WASHER ø6,6-18X2
59	70092C	3	NUT M6 DIN 980
60	00757908	1	SAFETY CHAIN
61	02967536	1	SCREW M22X150 DIN 931 8.8
62	701618C	1	SPRING WASHER ø23 SIMILAR TO DIN 127 B
63	6W238	1	NUT M22 DIN 934
64	3667577	1	PLUG

©2016 Alamo Group Inc.

BLANK INTENTIONALLY

©2016 Alamo Group Inc.

OPTIONAL KIT FOR 60 - RDF14

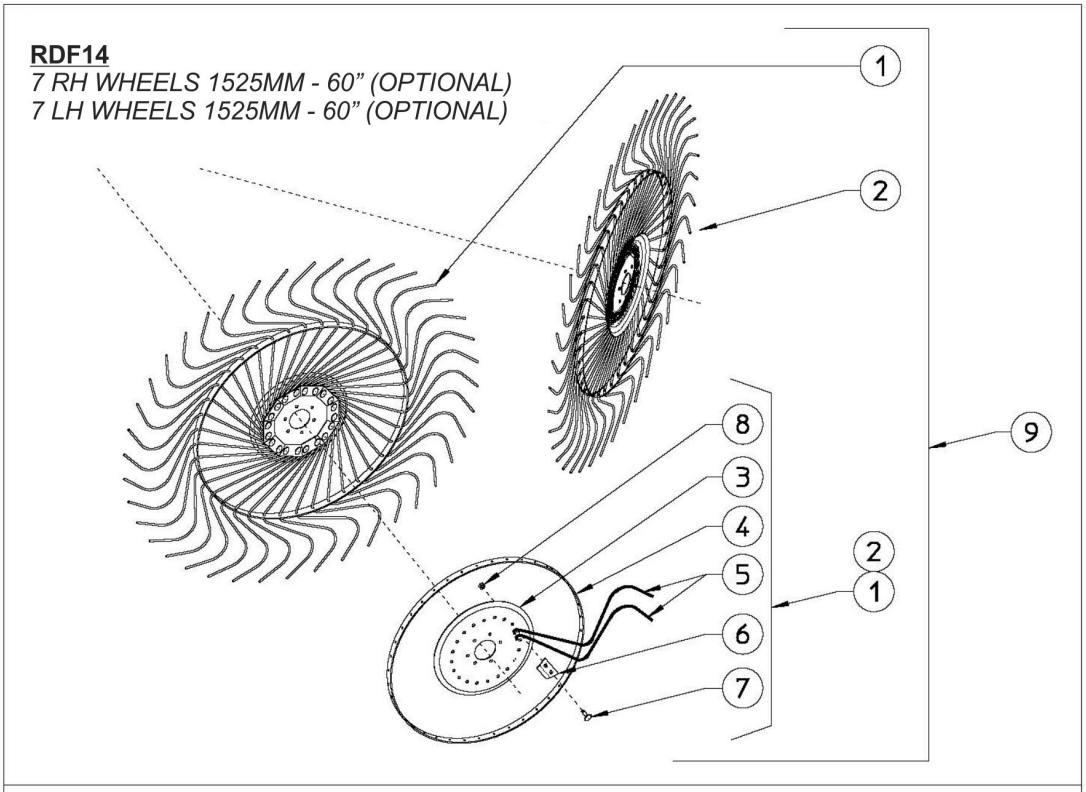

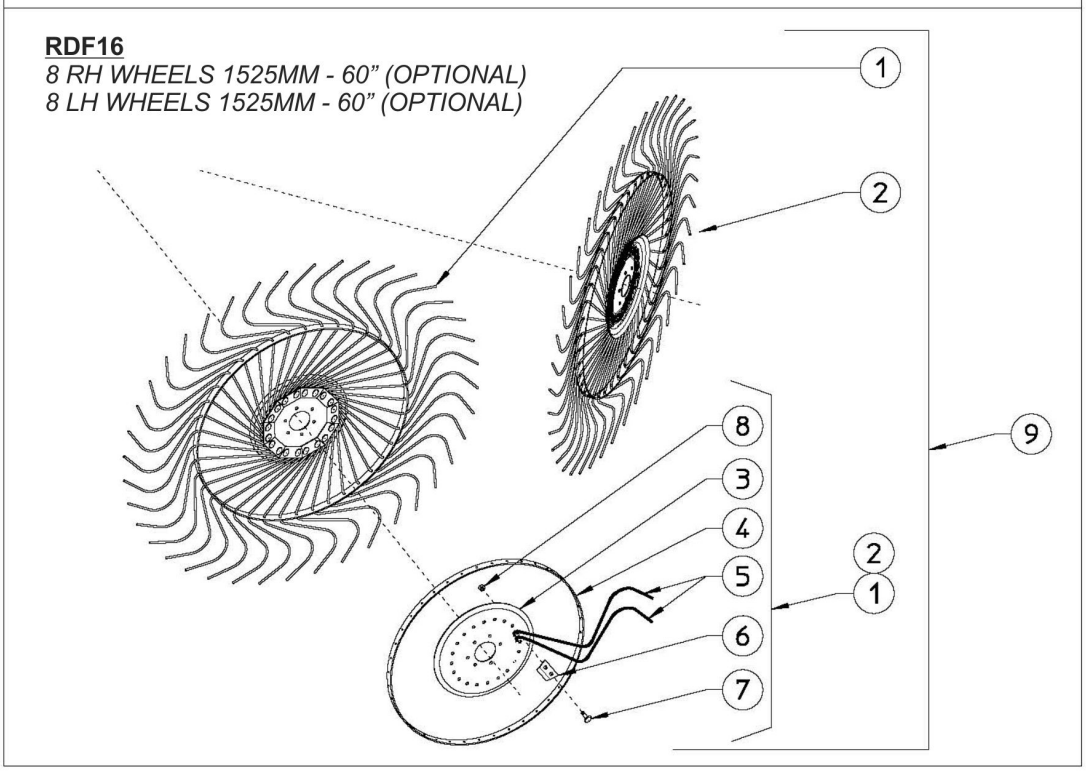

RDF12-14-16

OPTIONAL KIT FOR 60 - RDF14

Continued...

ITEM	PART NO.	QTY.	DESCRIPTION
1	3660128	7	RH FINGER WHEEL 60"
2	3660129	7	LH FINGER WHEEL 60"
3	3637549	14	FLANGE
4	3637550	14	RIM
5	3637551	560	TINE ø7,5
6	3637508	140	TINE CLAMP
7	70631C4	280	SCREW M10X25 DIN 603
8	00765676	280	NUT M10 DIN 980
9	6B1698	1	RAKE WHEELS KIT 60" FOR MKE/14 OPTIONAL

RDF12-14-16

OPTIONAL KIT FOR 60 - RDF16

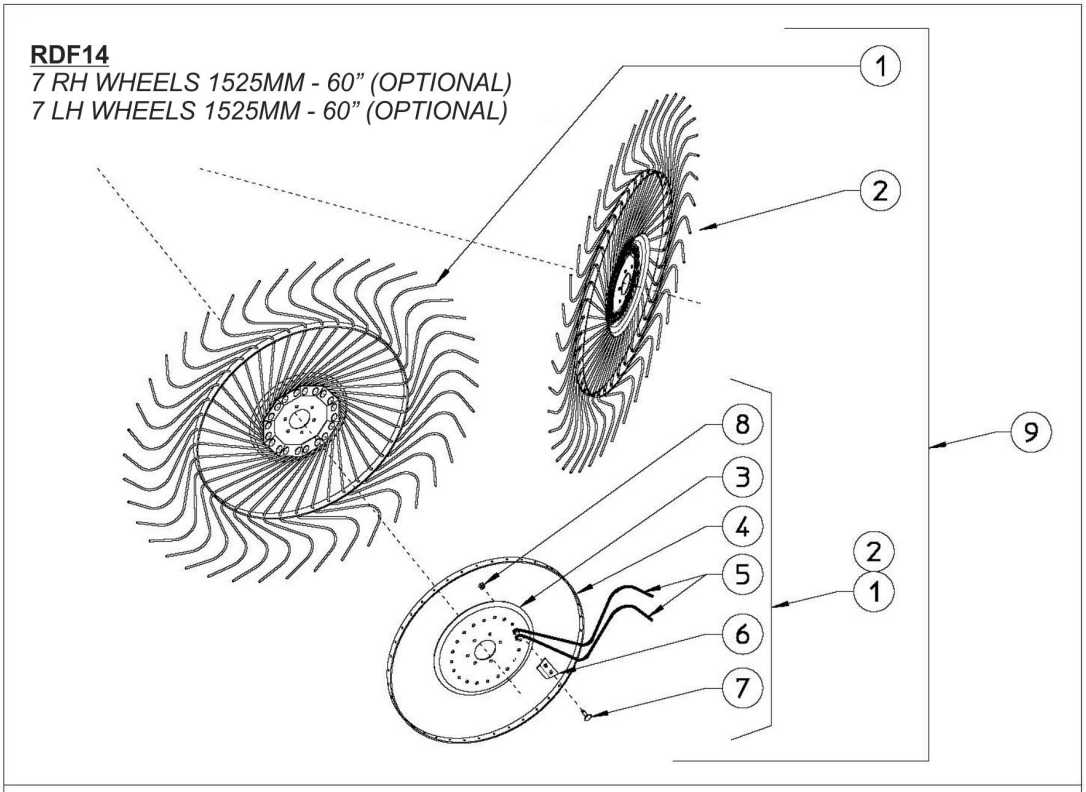

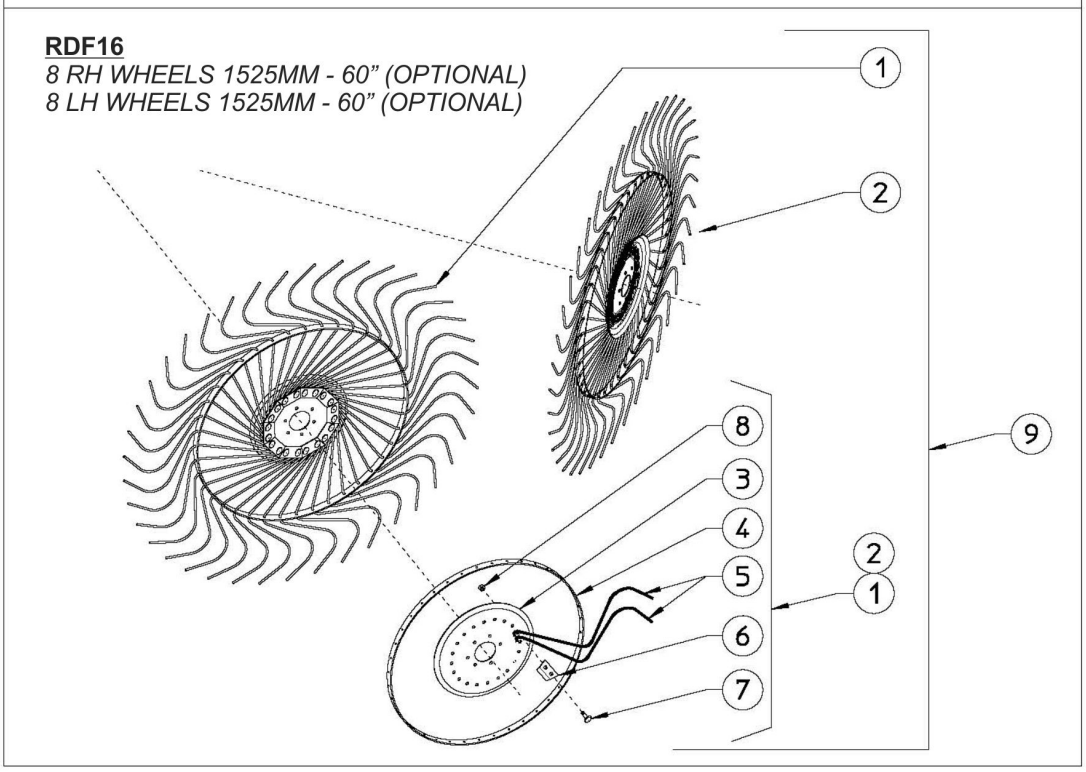

RDF12-14-16

Continued...

ITEM	PART NO.	QTY.	DESCRIPTION
1	3660128	8	RH FINGER WHEEL 60"
2	3660129	8	LH FINGER WHEEL 60"
3	3637549	16	FLANGE
4	3637550	16	RIM
5	3637551	640	TINE ø7,5
6	3637508	160	TINE CLAMP
7	70631C4	320	SCREW M10X25 DIN 603
8	00765676	320	NUT M10 DIN 980
9	6B1699	1	RAKE WHEELS KIT 60" FOR MKE/16 OPTIONAL

©2016 Alamo Group Inc.

RAKE WHEELS - OPTIONAL - RDF12

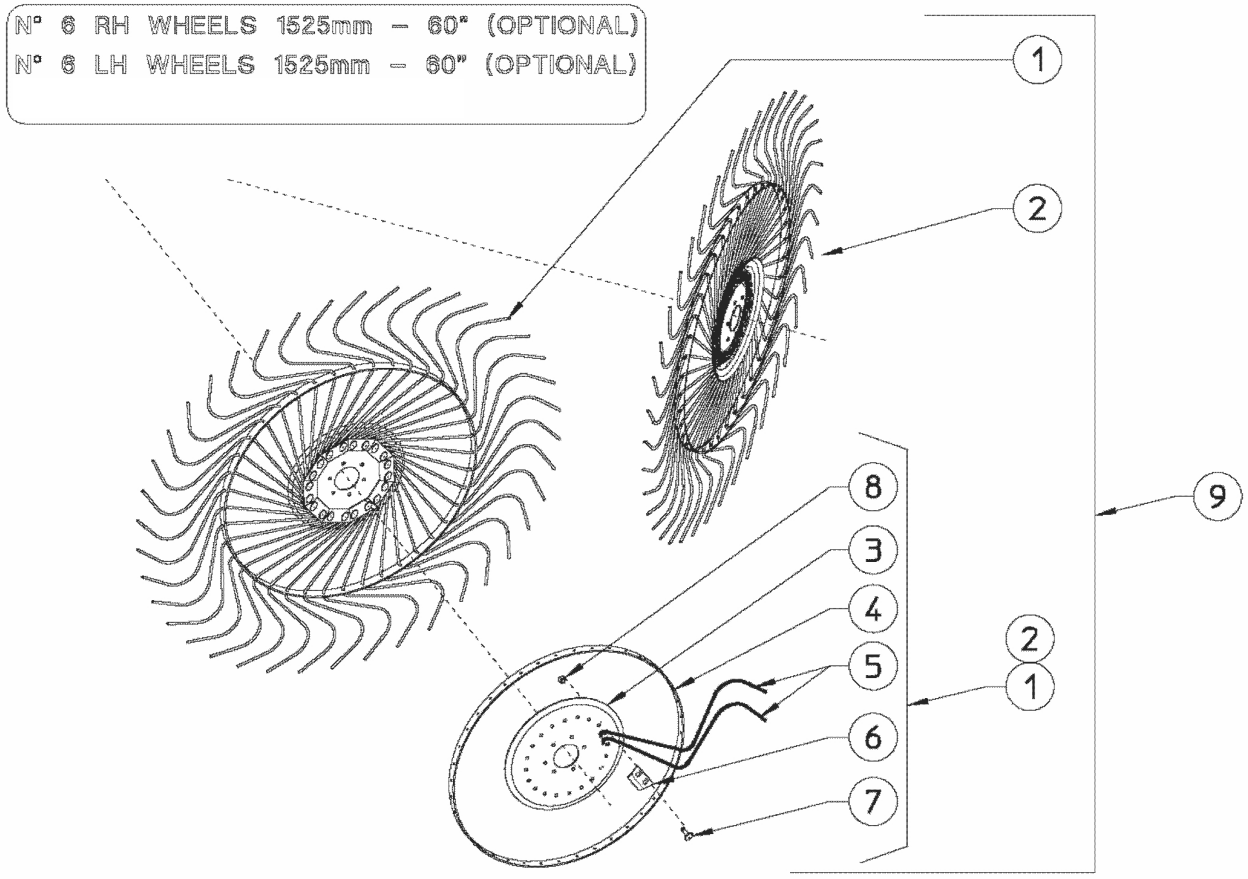

RDF12-14-16

Continued...

ITEM	PART NO.	QTY.	DESCRIPTION
1	3660128	6	RH FINGER WHEEL 60"
2	3660129	6	LH FINGER WHEEL 60"
3	3637549	1	FLANGE
4	3637550	1	RIM
5	3637551	40	TINE ø7,5
6	3637508	10	TINE CLAMP
7	00755949	20	SCREW M10X25 DIN 603
8	00765676	20	NUT M10 DIN 980
9	6B1697	1	RAKE WHEELS KIT 60" FOR RDF/12 OPTIONAL

©2016 Alamo Group Inc.

REAR PART - RDF14 & RDF16

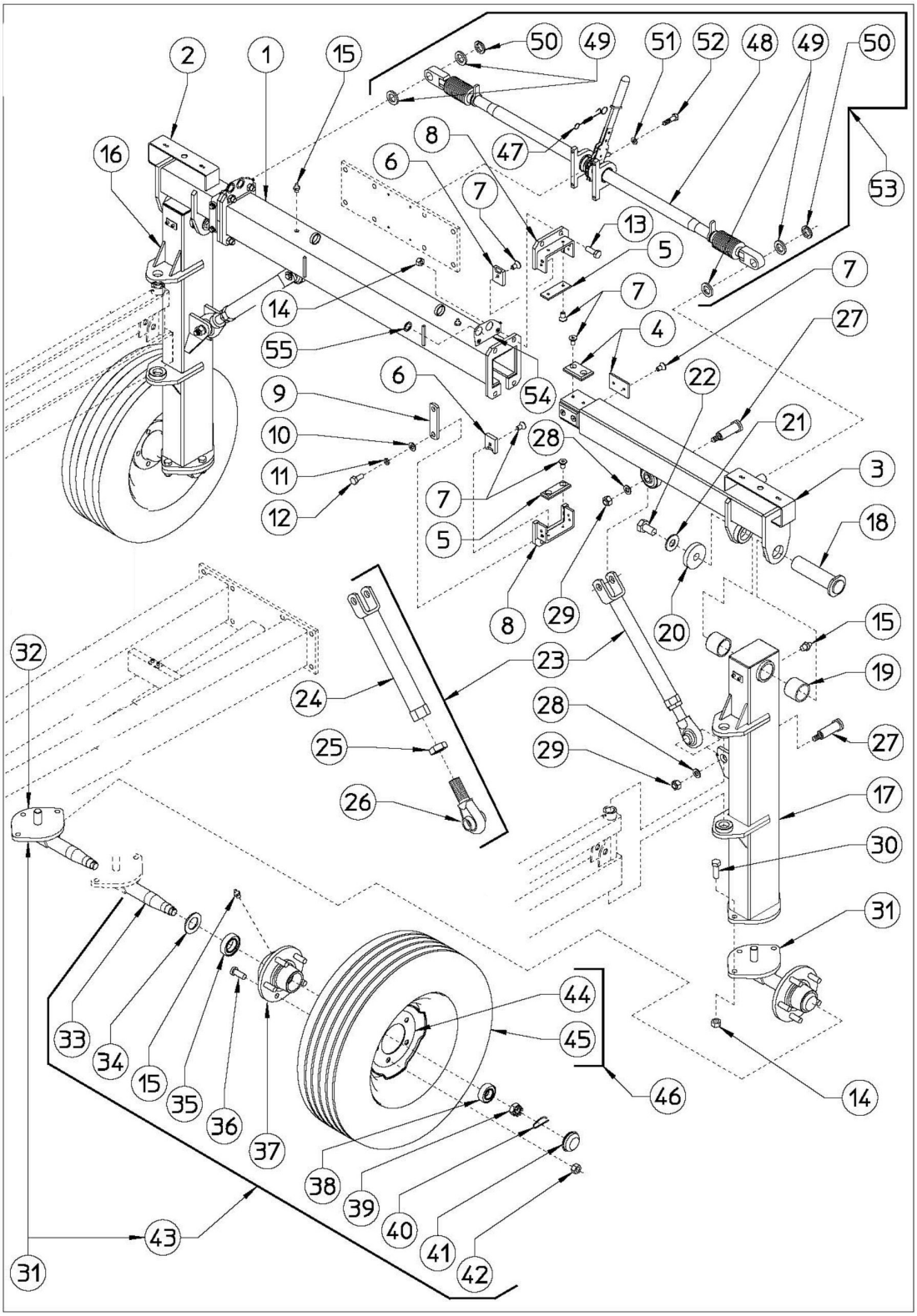

RDF12-14-16

Continued...

ITEM	PART NO.	QTY.	DESCRIPTION
1	3630251	1	OUTER CROSSPIECE
2	3630256	1	RH CROSSPIECE
3	3630257	1	LH CROSSPIECE
4	3667586	8	SLIDING
5	3667552	4	SLIDING
6	3667557	8	SLIDING
7	71554C8	32	SCREW M8 X 16 DIN 7991 8.8
8	3690219	4	SLIDING SUPPORT
9	3667587	4	LINKING PLATE
10	701512C	8	WASHER D 10,5 DIN 433
11	00755954	8	SPRING WASHER D 10.5 DIN 127B
12	61368C8	8	SCREW M10 X 25 DIN 933 8.8
13	00765901	8	SCREW M16 X 45 DIN 933 8.8
14	9143007	14	NUT M16 DIN 980
15	2568408	6	GREASE NIPPLE M8
16	3630288	1	REAR WHEEL SUPPORT,RH
17	3630289	1	REAR WHEEL SUPPORT,LH
18	3660215	2	PIN ø50
19	3637521	4	NYLON BUSH ø50-60
20	3668400	2	WASHER ø23-75 X 12
21	701618C	2	SPRING WASHER ø23 DIN 127 B
22	61424C8	2	SCREW M22 X 50 DIN 933 8.8
23	3660126	2	TIE ROD, COMPLETE
24	3630260	2	TIE ROD PIPE
25	7001139C	2	NUT M30 DIN 936
26	3630261	2	TIE ROD HEAD
27	3697597	4	PIN ø25
28	3668440	4	WASHER ø12-36X4
29	00772648	4	NUT M12 DIN 980
30	02957275	6	SCREW M16 X 50 DIN 933 8.8
31	3630262	2	HUB ASSY
32	3630263	2	FLANGE WITH PIN
33	3697550	2	PIN ONLY
34	3666800	2	DUST COVER
35	3666000	2	BEARING 30208
36	3668414	10	SCREW M16X1,5X50
37	3667505	2	HUB WITH SCREWS
38	3666001	2	BEARING 30206
39	3668408	2	CASTLE NUT M27 X 1,5
40	70487	2	SPLIT PIN ø3
41	3666700	2	CAP

©2016 Alamo Group Inc.

Continued...

ITEM	PART NO.	QTY.	DESCRIPTION
42	3638406	10	NUT M16X1,5
43	3660125	2	HUB WITHOUT FLANGE
44	3637600	2	RIM 6JX15
45	3637800	2	TIRE 205/75-15
46	3630103	2	WHEEL ASSY
47	3667424	1	LOCK SPRING
48	3660119	1	RATCHET LINK
49	3668429	4	SHIM ø30,5-50X6
50	3668425	2	LOCK-NUT M30 X 1,5
51	701611C	4	SPRING WASHER ø8,5 DIN 127B
52	613510C8	4	SCREW M8 X 30 DIN 933 8.8
53	3660420	1	RATCHET LINK, COMPLETE KIT
54	3697598	2	HOSE SUPPORT
55	3668441	4	GASKET

©2016 Alamo Group Inc.

BLANK INTENTIONALLY

©2016 Alamo Group Inc.

REAR SECTION & DRAWBAR - RDF12

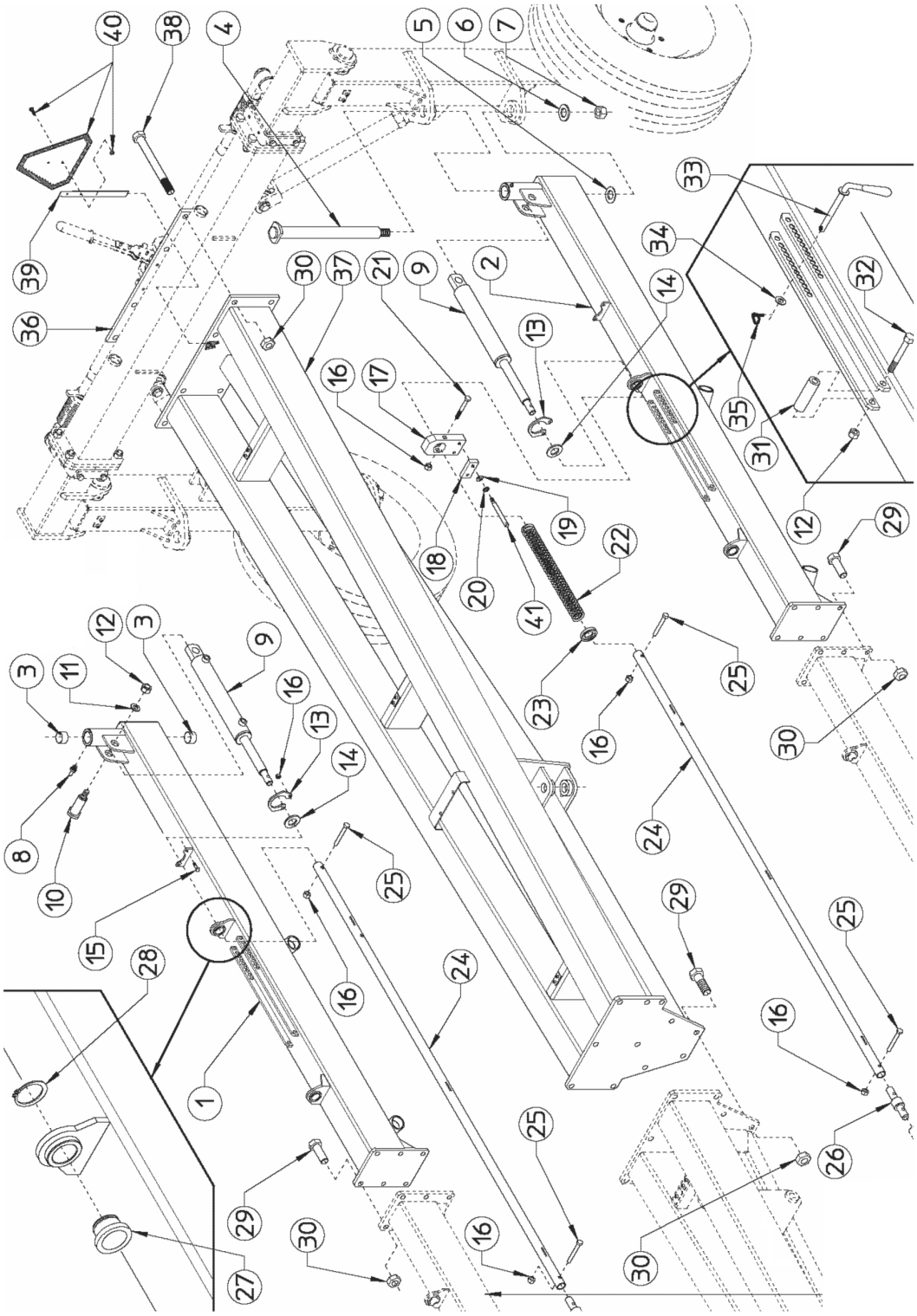

RDF12-14-16

Continued...

ITEM	PART NO.	QTY.	DESCRIPTION
1	3630264	1	RH SECTION
2	3630265	1	LH SECTION
3	3697599	4	BUSH ø35-39X30
4	3630266	2	PIN
5	3676901	2	SHIM ø35,2-51,8X1,5
6	3638409	2	WASHER ø23-50X4
7	700910C	2	NUT M22 DIN 980
8	2568408	2	GREASE NIPPLE M8
9	3697130	2	CILINDER ø50-60 ROD ø30
10	3637530	2	PIN ø25
11	3668440	2	WASHER ø12-36X4
12	00772648	4	NUT M12 DIN 980
13	3667594	2	CYLINDER LOCKING PLATE
14	3668442	2	SHIM ø25,25-35X4
15	61358C8	4	SCREW M8X25 DIN 931 8.8
16	70093C	10	NUT M8 DIN 980
17	3637531	2	SUPPORT
18	3637532	2	SLIDING
19	701511C	4	WASHER ø8,4 DIN 125A
20	701611C	4	SPRING WASHER ø8,5 DIN 127B
21	61056C8	2	SCREW M8X60 DIN 931 8.8
22	3667426	2	SPRING ø6 L.600-23,6"
23	3668443	2	BUSH ø34,5-50-60 X 20
24	3637533	2	PIPE ø33,7X4 L.2515-99"
25	61053C8	4	SCREW M8X45 DIN 931 8.8
26	3637534	2	PIN ø25-35
27	3666780	4	NYLON BUSH ø34,5
28	3698204	4	SNAP RING E42 DIN 471
29	00765901	22	SCREW M16X45 DIN 933 8.8
30	9143007	30	NUT M16 DIN 980
31	3668444	2	BUSH ø12,5-20
32	610710C8	2	SCREW M12X85 DIN 931 8.8
33	3668445	2	HANDLE
34	701513C	2	WASHER ø13 DIN 125A
35	3668413	2	SPLIT PIN ø4,5
36	3667584	1	DRAWBAR COUNTERPLATE
37	3630267	1	REAR DRAWBAR
38	3668432	8	SCREW M16X165 DIN 931 8.8
39	3637535	1	SUPPORT
40	03200347	1	SMV EMBLEME ASAES276.7
41	3637536	4	PIN ø12

RDF12-14-16

©2016 Alamo Group Inc.

REAR SECTION & DRAWBAR - RDF14 16

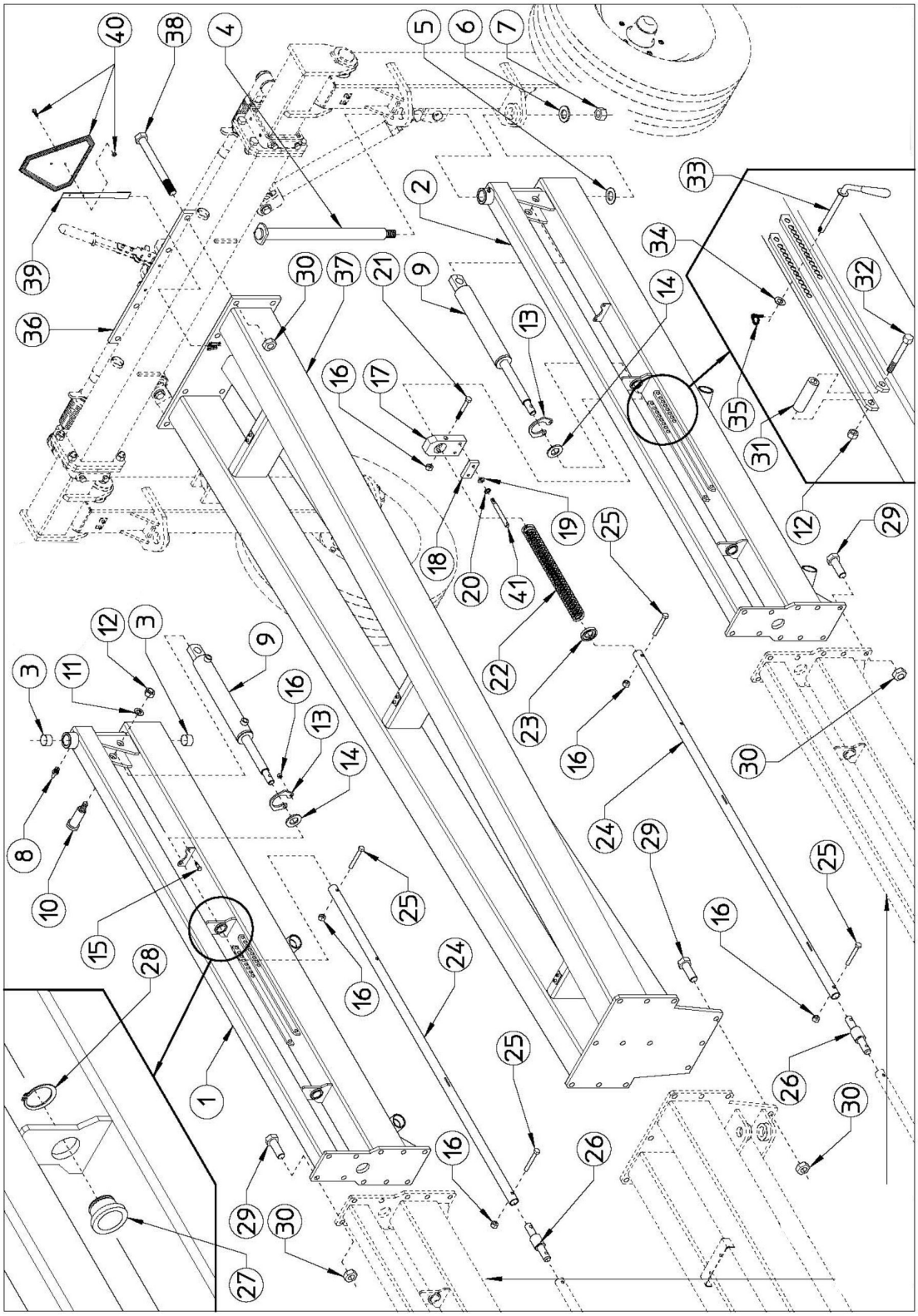

RDF12-14-16

Continued...

ITEM	PART NO.	QTY.	DESCRIPTION
1	3630290	1	RH SECTION
2	3630291	1	LH SECTION
3	3697599	4	BUSH ø35-39X30
4	3630292	2	PIN ø35
5	3676901	2	SHIM ø35,2-51,8X1,5
6	3638409	2	WASHER ø23-50X4
7	700910C	2	NUT M22 DIN 980
8	2568408	2	GREASE NIPPLE M8
9	3697130	2	CILINDER ø50-60 ROD ø30
10	3637530	2	PIN ø25
11	3668440	2	WASHER ø12-36X4
12	00772648	4	NUT M12 DIN 980
13	3667594	2	CYLINDER LOCKING PLATE
14	3668442	2	SHIM ø25,25-35X4
15	61358C8	4	SCREW M8X25 DIN 931 8.8
16	70093C	10	NUT M8 DIN 980
17	3637531	2	SUPPORT
18	3637532	2	SLIDING
19	701511C	4	WASHER ø8,4 DIN 125A
20	701611C	4	SPRING WASHER ø8,5 DIN 127B
21	61056C8	2	SCREW M8X60 DIN 931 8.8
22	3667426	2	SPRING ø6 L.600-23,6"
23	3668443	2	BUSH ø34,5-50-60 X 20
24	3637554	2	PIPE ø33,7X4 L.1670-65,75"
25	61053C8	4	SCREW M8X45 DIN 931 8.8
26	3637534	2	PIN ø25-35
27	3666780	4	NYLON BUSH ø34,5
28	3698204	4	SNAP RING E42 DIN 471
29	00765901	32	SCREW M16X45 DIN 933 8.8
30	9143007	40	NUT M16 DIN 980
31	3668444	2	BUSH ø12,5-20
32	610710C8	2	SCREW M12X85 DIN 931 8.8
33	3668445	2	HANDLE
34	701513C	2	WASHER ø13 DIN 125A
35	3668413	2	SPLIT PIN ø4,5
36	3667584	1	DRAWBAR COUNTERPLATE
37	3630293	1	REAR DRAWBAR
38	3668432	8	SCREW M16X165 DIN 931 8.8
39	3637535	1	SUPPORT
40	03200347	1	SMV EMBLEME ASAES276.7
41	3637536	4	PIN ø12

RDF12-14-16

©2016 Alamo Group Inc.

THIRD WHEEL KIT - RDF12

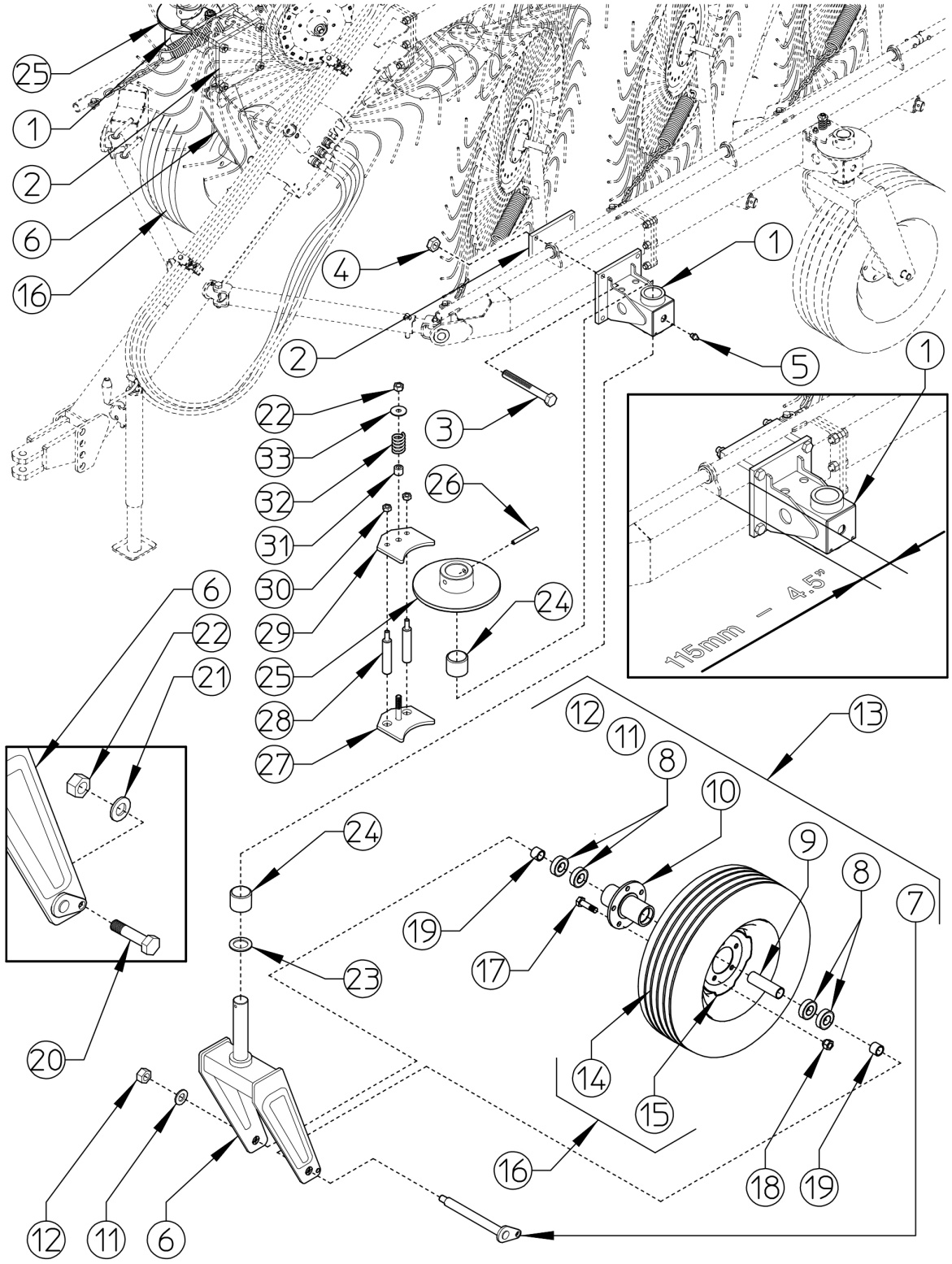

RDF12-14-16

Continued...

ITEM	PART NO.	QTY.	DESCRIPTION
1	3630287	2	SUPPORT
2	3637553	2	COUNTERPLATE
3	02967283	8	SCREW M14X140 DIN 931 8.8
4	70096C	8	NUT M14 DIN 980
5	2568408	2	GREASE NIPPLE M8
6	3630270	2	WHEEL SUPPORT
7	3630271	2	PIN ø30
8	3636003	8	BEARING 6206 2RS
9	3637537	2	SPACER
10	3637538	2	HUB
11	3638409	2	WASHER ø23-50X4
12	700910C	2	NUT M22 DIN 980
13	3660127	2	HUB ASSY
14	3637800	2	TIRE 205-75
15	3637600	2	WHEEL RIM 6JX15
16	3630103	2	COMPLETE WHEEL 205/75-R15
17	61895C8	10	SCREW M16X1,5 X 40 DIN 961
18	3638406	10	NUT M16X1,5
19	3667517	4	SPACER
20	02979380	2	SCREW M12X35 DIN 933 8.8
21	701513C	2	WASHER ø13 DIN 125A
22	00772648	4	NUT M12 DIN 980
23	3668401	2	SHIM ø50-75X5
24	3637521	4	NYLON BUSH ø50-60X50
25	3630229	2	BRAKE FLANGE
26	00756934	2	SPRING PIN ø10X80 DIN 1481
27	3630272	2	BRAKE COUNTERPLATE
28	3637539	4	PIN ø20
29	3637540	2	BRAKE PLATE
30	00765676	4	NUT M10 DIN 980
31	3637541	2	SPACER
32	3637423	2	SPRING ø5-ø30X45
33	3668440	2	WASHER ø12-36X4

RDF12-14-16

©2016 Alamo Group Inc.

WHEELS - RDF12

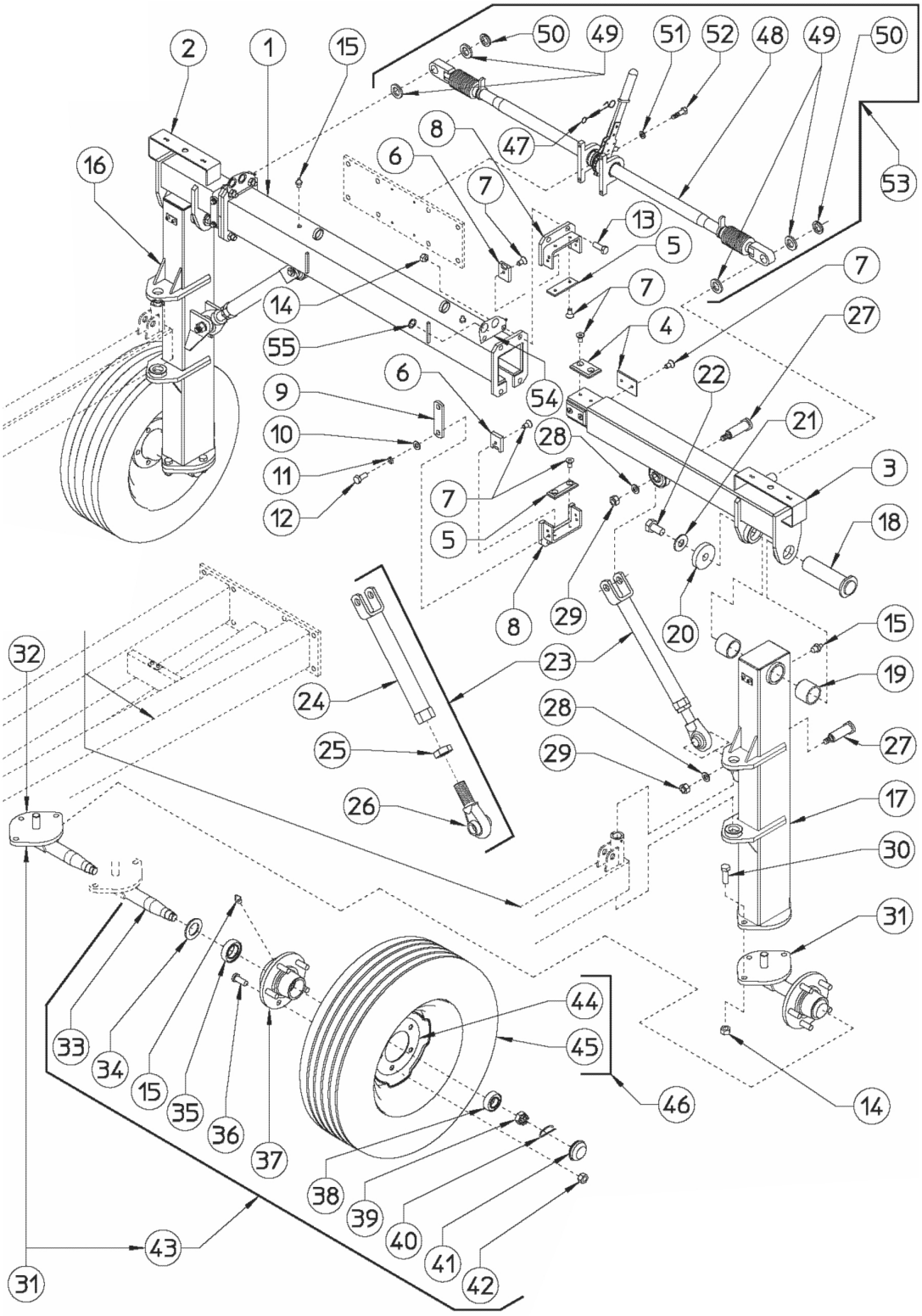

RDF12-14-16

Continued...

ITEM	PART NO.	QTY.	DESCRIPTION
1	3630251	1	OUTER CROSSPIECE
2	3630256	1	RH CROSSPIECE
3	3630257	1	LH CROSSPIECE
4	3667586	8	SLIDING
5	3667552	4	SLIDING
6	3667557	8	SLIDING
7	71554C8	32	SCREW M8 X 16 DIN 7991 8.8
8	3690219	4	SLIDING SUPPORT
9	3667587	4	LINKING PLATE
10	701512C	8	WASHER D 10,5 DIN 433
11	00755954	8	SPRING WASHER D 10.5 DIN 127B
12	61368C8	8	SCREW M10 X 25 DIN 933 8.8
13	00765901	8	SCREW M16 X 45 DIN 933 8.8
14	9143007	14	NUT M16 DIN 980
15	2568408	6	GREASE NIPPLE M8
16	3630258	1	REAR WHEEL SUPPORT,RH
17	3630259	1	REAR WHEEL SUPPORT,LH
18	3660215	2	PIN ø50
19	3637521	4	NYLON BUSH ø50-60
20	3668400	2	WASHER ø23-75 X 12
21	701618C	2	SPRING WASHER ø23 DIN 127 B
22	61424C8	2	SCREW M22 X 50 DIN 933 8.8
23	3660126	2	TIE ROD, COMPLETE
24	3630260	2	TIE ROD PIPE
25	700139C	2	NUT M30 DIN 936
26	3630261	2	TIE ROD HEAD
27	3697597	4	PIN ø25
28	3668440	4	WASHER ø12-36X4
29	00772648	4	NUT M12 DIN 980
30	02957275	6	SCREW M16 X 50 DIN 933 8.8
31	3630262	2	HUB ASSY
32	3630263	2	FLANGE WITH PIN
33	3697550	2	PIN ONLY
34	3666800	2	DUST COVER
35	3666000	2	BEARING 30208
36	3668414	10	SCREW M16X1,5X50
37	3667505	2	HUB WITH SCREWS
38	3666001	2	BEARING 30206
39	3668408	2	SLOTTED NUT M27 X 1,5
40	70487	2	SPLIT PIN ø3
41	3666700	2	CAP

RDF12-14-16

©2016 Alamo Group Inc.

Continued...

ITEM	PART NO.	QTY.	DESCRIPTION
42	3638406	10	NUT M16X1,5
43	3660125	2	HUB WITHOUT FLANGE
44	3637600	2	RIM 6JX15
45	3637800	2	TIRE 205/75-15
46	3630103	2	WHEEL ASSY
47	3667424	1	LOCK SPRING
48	3660119	1	RATCHET LINK
49	3668429	4	SHIM ø30,5-50X6
50	3668425	2	LOCK-NUT M30 X 1,5
51	701611C	4	SPRING WASHER ø8,5 DIN 127B
52	613510C8	4	SCREW M8 X 30 DIN 933 8.8
53	3660420	1	RATCHET LINK, COMPLETE KIT
54	3697598	2	HOSE SUPPORT
55	3668441	4	GASKET

RDF12-14-16

©2016 Alamo Group Inc.

SERVIS-RHINO
LIMITED WARRANTY

1. LIMITED WARRANTIES

1.01. Servis-Rhino warrants for one year from the purchase date to the original non-commercial, governmental, or municipal purchaser ("Purchaser") and warrants for six months to the original commercial or industrial purchaser ("Purchaser") that the goods purchased are free from defects in material or workmanship.

1.02. Manufacturer will replace for the Purchaser any part or parts found, upon examination at one of its factories, to be defective under normal use and service due to defects in material or workmanship.

1.03. This limited warranty does not apply to any part of the goods which has been subjected to improper or abnormal use, negligence, alteration, modification, or accident, damaged due to lack of maintenance or use of wrong fuel, oil, or lubricants, or which has served its normal life. This limited warranty does not apply to any part of any internal combustion engine, or expendable items such as blades, shields, guards, or pneumatic tires except as specifically found in your Operator's Manual.

1.04. Except as provided herein, no employee, agent, Dealer, or other person is authorized to give any warranties of any nature on behalf of Manufacturer.

2. REMEDIES AND PROCEDURES.

2.01. This limited warranty is not effective unless the Purchaser returns the Registration and Warranty Form to Manufacturer within 30 days of purchase.

2.02. Purchaser claims must be made in writing to the Authorized Dealer ("Dealer") from whom Purchaser purchased the goods or an approved Authorized Dealer ("Dealer") within 30 days after Purchaser learns of the facts on which the claim is based.

2.03. Purchaser is responsible for returning the goods in question to the Dealer.

2.04. If after examining the goods and/or parts in question, Manufacturer finds them to be defective under normal use and service due to defects in material or workmanship, Manufacturer will:

(a) Repair or replace the defective goods or part(s) or

(b) Reimburse Purchaser for the cost of the part(s) and reasonable labor charges (as determined by Manufacturer) if Purchaser paid for the repair and/or replacement prior to the final determination of applicability of the warranty by Manufacturer.

The choice of remedy shall belong to Manufacturer.

2.05. Purchaser is responsible for any labor charges exceeding a reasonable amount as determined by Manufacturer and for returning the goods to the Dealer, whether or not the claim is approved. Purchaser is responsible for the transportation cost for the goods or part(s) from the Dealer to the designated factory.

3. LIMITATION OF LIABILITY.

3.01. MANUFACTURER DISCLAIMS ANY EXPRESS (EXCEPT AS SET FORTH HEREIN) AND IMPLIED WARRANTIES WITH RESPECT TO THE GOODS INCLUDING, BUT NOT LIMITED TO, MERCHANTABILITY AND FITNESS FOR A PARTICULAR PURPOSE.

3.02. MANUFACTURER MAKES NO WARRANTY AS TO THE DESIGN, CAPABILITY, CAPACITY, OR SUITABILITY FOR USE OF THE GOODS.

3.03. EXCEPT AS PROVIDED HEREIN, MANUFACTURER SHALL HAVE NO LIABILITY OR RESPONSIBILITY TO PURCHASER OR ANY OTHER PERSON OR ENTITY WITH RESPECT TO ANY LIABILITY, LOSS, OR DAMAGE CAUSED OR ALLEGED TO BE CAUSED DIRECTLY OR INDIRECTLY BY THE GOODS INCLUDING, BUT NOT LIMITED TO, ANY INDIRECT, SPECIAL, CONSEQUENTIAL, OR INCIDENTAL DAMAGES RESULTING FROM THE USE OR OPERATION OF THE GOODS OR ANY BREACH OF THIS WARRANTY. NOT WITHSTANDING THE ABOVE LIMITATIONS AND WARRANTIES, MANUFACTURER'S LIABILITY HEREUNDER FOR DAMAGES INCURRED BY PURCHASER OR OTHERS SHALL NOT EXCEED THE PRICE OF THE GOODS.

3.04. NO ACTION ARISING OUT OF ANY CLAIMED BREACH OF THIS WARRANTY OR TRANSACTIONS UNDER THIS WARRANTY MAY BE BROUGHT MORE THAN TWO (2) YEARS AFTER THE CAUSE OF ACTION HAS OCCURRED.

4. MISCELLANEOUS.

4.01. Proper Venue for any lawsuits arising from or related to this limited warranty shall be only in Guadalupe County, Texas.

4.02. Manufacturer may waive compliance with any of the terms of this limited warranty, but no waiver of any terms shall be deemed to be a waiver of any other term.

4.03. If any provision of this limited warranty shall violate any applicable law and is held to be unenforceable, then the invalidity of such provision shall not invalidate any other provisions herein.

4.04. Applicable law may provide rights and benefits to purchaser in addition to those provided herein.

KEEP FOR YOUR RECORDS

ATTENTION: Purchaser should fill in the blanks below for his reference when buying repair parts and/or for proper machine identification when applying for warranty.

Servis-Rhino Implement Model _____ Serial Number _____

Date Purchased _____ Dealer _____

ATTENTION:
READ YOUR OPERATOR'S MANUAL

RHINO®
1020 S. Sangamon Ave.
Gibson City, IL 60936
800-446-5158
Email: parts@servis-rhino.com

TO THE OWNER/OPERATOR/DEALER

To keep your implement running efficiently and safely, read your manual thoroughly and follow these directions and the Safety Messages in this Manual. The Table of Contents clearly identifies each section where you can easily find the information you need.

The OCCUPATIONAL SAFETY AND HEALTH ACT (1928.51 Subpart C) makes these minimum safety requirements of tractor operators:

REQUIRED OF THE OWNER:

1. Provide a Roll-Over-Protective Structure that meets the requirements of this Standard; and
2. Provide Seatbelts that meet the requirements of this paragraph of this Standard and SAE J4C; and
3. Ensure that each employee uses such Seatbelt while the tractor is moving; and
4. Ensure that each employee tightens the Seatbelt sufficiently to confine the employee to the protected area provided by the ROPS.

REQUIRED OF THE OPERATOR

1. Securely fasten seatbelt if the tractor has a ROPS.
2. Where possible, avoid operating the tractor near ditches, embankments, and holes.
3. Reduce speed when turning, crossing slopes, and on rough, slick, or muddy surfaces.
4. Stay off slopes too steep for safe operation.
5. Watch where you are going - especially at row ends, on roads, and around trees.
6. Do not permit others to ride.
7. Operate the tractor smoothly - no jerky turns, starts, or stops.
8. Hitch only to the drawbar and hitch points recommended by the tractor manufacturer.
9. When the tractor is stopped, set brakes securely and use park lock, if available.

☑ **Keep children away from danger all day, every day...**

☑ **Equip tractors with rollover protection (ROPS) and keep all machinery guards in place...**

☑ **Please work, drive, play and live each day with care and concern for your safety and that of your family and fellow citizens.**