VALVE AND PLUMBING KIT (PARALLEL)
SMC 84Q & 2408 LOADERS
KUBOTA TRACTORS

MODEL	2WD	4WD	LESS CAB	WITH CAB
LB2214		X	X	
LB2614		X	X	
LK2254		X	X	
LK3054		X	X	

TRACTOR AND VALVE KIT GENERAL INFORMATION

Valve and plumbing kit can be installed on tractor using tools ordinarily available. Valve control linkage has been factory preassembled for ease of installation.

NOTE: *Apply sealant only to all tapered threads unless coupled with swivel adapters. When using Teflon tape, wrap tape clockwise (as viewed from end) and wrap tape only twice. Keep sealant away from first two threads of tapered end to prevent contamination of hydraulic fluid. Do not use sealant on O-ring or flare adapter threads.*

WARNING: *Escaping hydraulic fluid under pressure can penetrate skin, causing serious personal injury.*

- Do not use your hands to check for leaks. Use a piece of cardboard or paper. Always wear eye protection when searching for leaks.
- Place control lever in float position and stop tractor engine to relieve hydraulic pressure before connecting or disconnecting lines.
- Tighten all connections before starting engine or pressurizing lines.

If any fluid is injected into skin, obtain medical attention immediately or gangrene may result.

Shut off tractor engine, remove key, engage tractor brakes, and completely lower three-point hitch during installation.

ATTACHING VALVE TO LOADER MOUNTING BRACKET (Figures 1 & 2)

1. Install 3/4 x 9/16 elbow fitting (9) to valve (1). Install adapter fittings (22), female quick couplers (15) and 1" colored bands (16) to working ports of valve (1).
2. Fasten valve mounting plate (23) to valve mounting bracket (24) using 3/8 x 2-1/4 cap screw (2), 3/8 x 1 cap screw (27), and 3/8 lock nuts (5).
3. Fasten valve (1) to valve mounting plate (23), with power beyond port on the bottom, using 5/16 x 3/4 cap screws (6) and 5/16 lock washers (7)(Figure 1).
4. Fasten decal mounting plate (4) to valve using 5/16 x 3/4 cap screw (6) and 5/16 lock washer (7). Making sure surface of decal mounting plate is clean and dry, remove backing from decal (20) and apply it to decal mounting plate.
5. Thread nut (13) onto handle (3). Attach handle (3) and extension (10), if needed, to valve (1). Slip boot (14) over handle and cover handle assembly. Attach ball (8) to handle.
6. Attach valve mounting bracket (24) to right midmounting bracket using 1/2 x 2-3/4 cap screws (29), 1/2 flat washers (30), and 1/2 lock nuts (28).

NOTE: *On L2600 & L3000 tractors, valve mounting bracket (24) is attached to front side of right mid-mounting.*

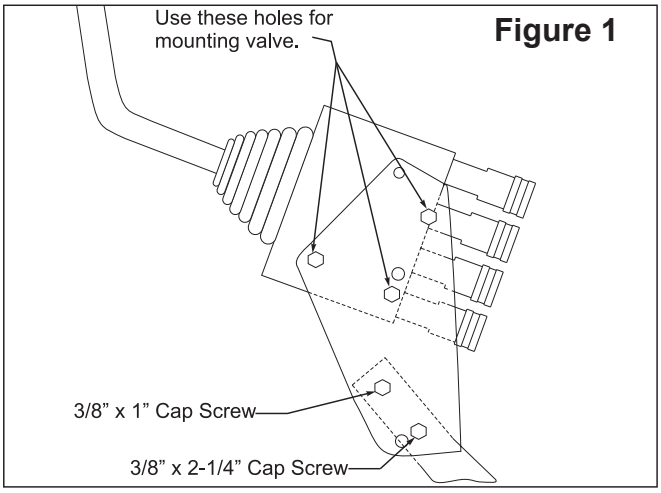

Figure 1

2-6346

PARTS LIST - VALVE & PLUMBING KIT

Item	Part No.	Description	QTY.
1	43589	VALVE, Prince LVR (1600 PSI)	1
2	G180134	SCREW, Cap, 3/8-16 x 2-1/2	1
3	43517	HANDLE, Standard	1
4	43451	ANGLE, Decal Mounting	1
5	G9413534	NUT, Lock, 3/8-16	2
6	G180077	SCREW, Cap, 5/16-18 x 3/4	4
7	G120214	WASHER, Lock, 5/16	4
8	38902	BALL, Handle	1
9	32845-7	FITTING, Elbow, 9/16-18 JIC x 3/4-16 O-ring, 90°	1
10	36766	FITTING, Banjo	3
11	36386-7	HOSE, 3/8 x 32 (Power Beyond)	1
12	43454-2	HOSE, 3/8 x 36 (Pressure & Tank)	2
13	G271506	NUT, Hex, 7/16-20	1
14	43635	BOOT	1
15	6147-4	COUPLER, Female	4
16	36240-9	SPIRAL BAND, Plastic, Blue, 1”	1
	36240-10	SPIRAL BAND, Plastic, Red, 1”	1
	36240-11	SPIRAL BAND, Plastic, Yellow, 1”	1
	36240-12	SPIRAL BAND, Plastic, Green, 1”	1
17	36336-1	HOSE, 3/8 x 78	4
18	36240-5	SPIRAL BAND, Plastic, Blue, 5/8	1
	36240-6	SPIRAL BAND, Plastic, Red, 5/8	1
	36240-7	SPIRAL BAND, Plastic, Yellow, 5/8	1
	36240-8	SPIRAL BAND, Plastic, Green, 5/8	1
19	6137-4	COUPLER, Male	4
20	43453	DECAL, Single Handle Control	1
21	8137-1	STRAP, Adjustable, 3/16 x 11	3
22	39280-7	FITTING, Adapter, 3/4-16 O-ring x 3/8 NPT	4
23	44168	PLATE, Valve Mounting	1
24	44334	BRACKET, Valve Mounting	1
25	34853-2	SLEEVE, Nylon, 66”	
26	7438-1	TARP Strap	1
27	G180122	SCREW, Cap, 3/8-16 x 1”	1
28	G9414074	NUT, Lock, 1/2-13	2
29	G180185	SCREW, Cap, 1/2-13 x 2-1/2	2
30	G120396	WASHER, Flat, 1/2	2
31	32844-1	FITTING, Adapter, 9/16 O-ring x 9/16-18 JIC	3
32	43763	BOLT, Flow	3
33	36769	SEAL RING, Copper	3
34	6000-82	O-RING, 3/8 x 1/2 x .070	3
35	8137-5	STRAP, Adjust, 1/2 x 34	1
36	46533	ORIFICE RESTRICTOR KIT (.094 dia.)	1

Figure 2

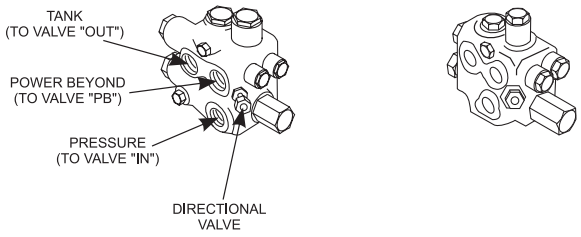

NOTE: *LK 2554 also requires conversion kit 2-6140.*

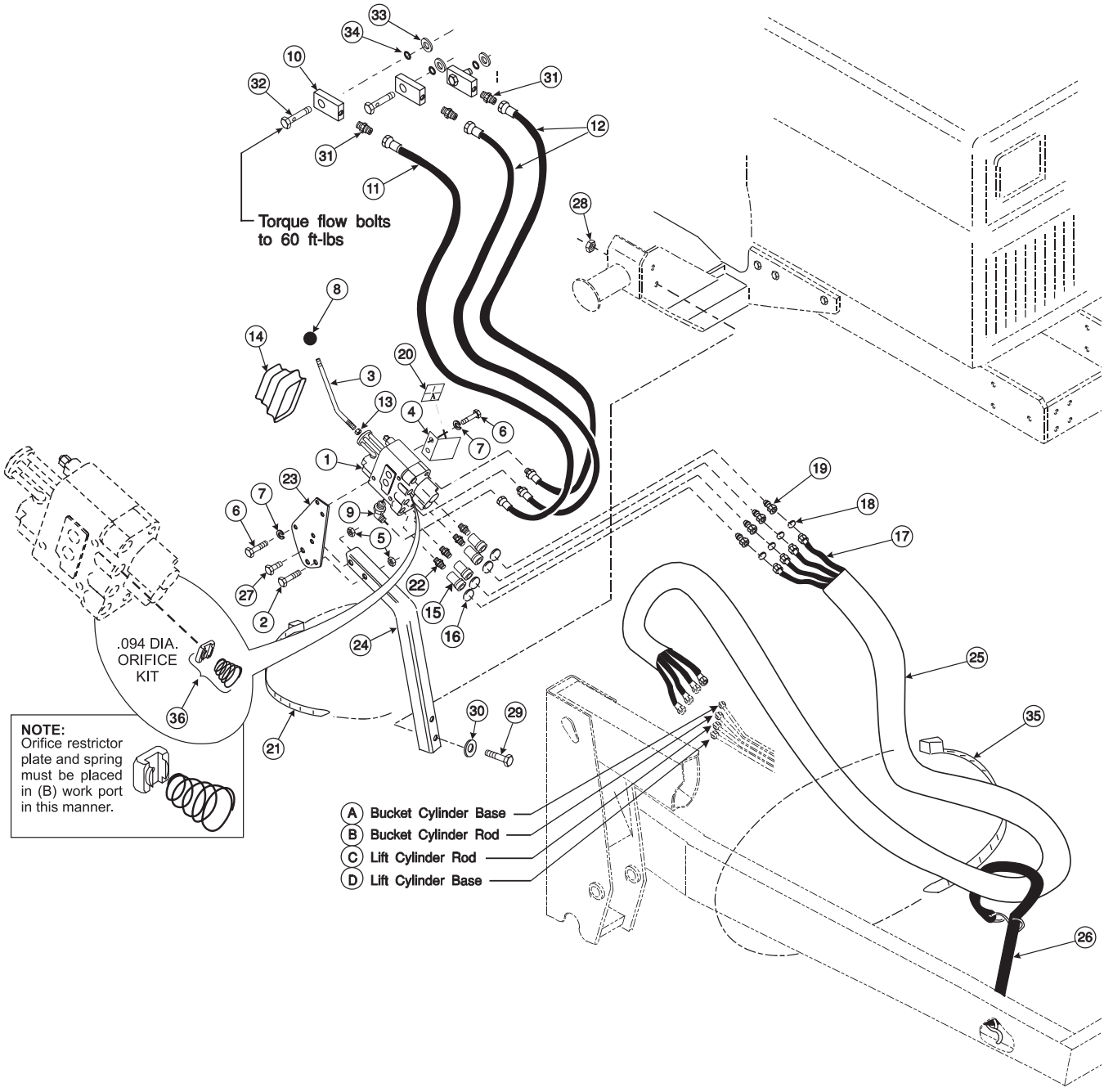

2-6346

PLUMBING CONTROL VALVE TO TRACTOR HYDRAULICS (Figures 2 & 3)

1. Install 3/8 x 36 hose (12) to elbow fitting (9) in power beyond port of valve (1).

2. Install 3/8 x 32 hoses (11) to tank and pressure ports in valve (1).

3. Route hoses (11 & 12) to ports on hydraulic block.

4. Remove plugs from ports of tractor hydraulic block.

5. Install banjo fittings (10) (facing forward) to tractor hydraulic ports using flow bolts (32), O-rings (34) and copper seal rings (33). O-rings (34) act only as spacer to center copper seal rings on flow bolt.

   NOTE: *To avoid leaks, orient banjo fittings so fitting body does not overlap areas of hydraulic outlet which are not spotfaced. LK 2554 - Orient banjo fittings as shown in 2-6140 conversion kit. Torque flow bolts (32) to 60 ft-lbs.*

6. Install 9/16 adapter fittings (31) into banjo fittings (10).

7. Connect power beyond hose (12) to power beyond port in tractor hydraulic block. Connect pressure hose (11) to pressure port in tractor hydraulic block. Connect tank hose (11) to tank port in tractor transmission.

8. Secure hoses (11 & 12) to valve mounting stand (24) using plastic tie strap (21).

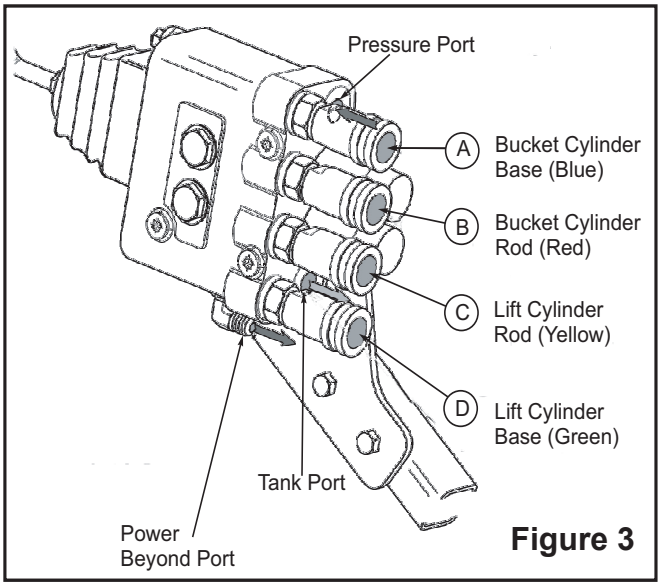

Figure 3

PLUMBING LOADER TO CONTROL VALVE

1. Install 3/8 x 78 hoses (17) onto boom oil line tubes. Install and tighten hose fittings one at a time from the bottom up. Loosening the closest oil line clamp will ease installation.

2. Install spiral bands (18) onto free ends of hoses (17) to match bands on female quick couplers (15). Slide nylon sleeve (25) over hoses (17) and install male quick couplers (19) onto free ends.

3. Connect hoses from upper two boom oil lines to upper quick couplers and connect hoses from lower two boom oil lines to lower quick couplers. Wrap rubber strap (26) around nylon sleeve and hook on itself. Attach free end of rubber strap to hole provided in right side frame channel.

4. Bundle hoses (17) together and secure to right side frame channel using adjustable tie strap (35).

5. Slowly cycle lift and bucket cylinders several times to purge air from hydraulic system. Retract cylinders and shut off tractor engine. Replenish tractor hydraulic system.

   NOTE: *When cycling loader, operate loader according to operation decal (20) on valve box. If direction of control lever is wrong, or loader will not lower, recheck connections shown.*

WARNING: *Escaping hydraulic fluid under pressure can have sufficient force to penetrate skin causing serious personal injury. If injured by escaping hydraulic fluid, obtain medical treatment immediately.*

PRINCE LVR VALVE SERVICE

Following is an outline procedure for disassembling and reassembling valve.

WARNING: The valve has a valve relief setting pre-set at the factory. Tampering with this setting can cause serious injury to operator and damage to tractor or loader. Unauthorized adjustments or service to valve relief will VOID WARRANTY of both loader and tractor. If adjustments or service to valve relief are required during warranty period, an authorized service department must be consulted for authorization.

VALVE DISASSEMBLY (Figure 5)

NOTE: *It is advisable to mark or tag all parts so they will be reinstalled in their proper position.*

NOTE: *Handle linkage parts have been assembled using Loctite® 262 or equivalent.*

1. Slide boot (6) to top of handle (34). Remove hex head cap screws (36) from rod ends (9 & 10). Remove handle with boot and adapter plate (8). Remove nuts (28) and shim washer (31) from spool stud (7) and rod end assemblies (10). Remove spool stud (7) and rod end assemblies (10) from valve.

   NOTE: *Spool adapters (33) are factory assembled using Loctite® 222 or equivalent. Removal from spools is not necessary. If replacing a damaged adapter, clean threads with alcohol and Loctite® primer and install using Loctite® 262.*

2. Remove hex head cap screws (13) and detent end caps (14) from both spools. Remove detent sleeve (12) from regen spool. Remove steel balls (20), poppet (21), and poppet spring (19) from detent retainer (24). Remove retaining flat (15) and detent spacer (16) from regen spool.

3. Secure handle end of regen spool. Using a rod through retainer ball holes, remove detent retainer (24) from regen spool.

   NOTE: *Detent retainers (18 & 24) are installed on spools using Loctite® 222 or equivalent. If spool adapter comes loose instead of detent retainer, pull spool completely out of valve and secure spool using vise grips on land section of spool which is not machined for valve bore.*

4. Remove washer (17), centering spring (26), and stop cup (23) from regen spool.

5. Holding in on float detent sleeve (22), push on float spool from handle end and remove steel balls (20) from float detent retainer (18). Remove float detent sleeve (22), poppet (21), poppet spring (19), retaining flat (15), and space (16) from float spool.

6. Secure handle end of float spool. Using a rod through retainer ball holes, remove detent retainer (18) from float spool.

   NOTE: Detent retainers (18 & 24) are installed on spools using Loctite® 222 or equivalent. If spool adapter comes loose instead of detent retainer, pull spool completely out of valve and secure spool using vise grips on land section of spool which is not machined for valve bore.

   Remove washer (17), centering spring (26), and stop cup (23) from float spool.

7. Push spools in from handle end until rear spool seals (1) are exposed. Using wire hook and screwdriver, remove rear spool seals. Push spools in from rear until front spool seals (1) are exposed. Using wire hook and screwdriver, remove front spool seals.

8. Clean all parts, including valve body, in suitable cleaning solvent. After cleaning parts with solvent, use air pressure to blow any dirt or excess solvent from all parts, including inside of valve body.

VALVE REASSEMBLY (Figure 5)

1. Examine all parts for wear and damage and replace if necessary.

2. Lubricate all O-rings and spools with oil to prevent damage when assembling.

3. Lubricate all detent and spring centering parts with a light coat of grease before assembling.

4. Reassemble all parts in reverse order of disassembly.

   NOTE: *Use Loctite® 222 or equivalent when installing detent retainers.*

RELIEF VALVE, LOAD CHECK PLUGS, and POWER BEYOND SLEEVE

NOTE: *Relief valve (3) , load check plugs (27), and power beyond sleeve (2) may be removed separately to clean, inspect, or replace parts, without removing valve spools.*

NOTE: *If repairing or replacing relief valve (3), torque larger hex nut (relief body) to 20-25 ft.·lbs.*

2-6346

PARTS LIST – PRINCE LVR VALVE

Item	Part No.	Description	Qty.
1	43633	SEAL KIT	1
2	43636	POWER BEYOND SLEEVE	1
3	43637-1	RELIEF VALVE (3000 PSI)	1
4	43638	FLOAT KIT, (Includes 13, 14, 15, 16, 17, 18, 19, 20, 21, 22, 23, and 26)	1
5	43639	REGEN KIT, (Includes items 12, 13, 14, 15, 16, 17, 19, 20, 21, 24, and 26)	1
6	43635	BOOT, Rubber, Valve Handle	1
7	51076	STUD, Spool	1
8	1078	ADAPTER PLATE	1
9	38900-4	ROD END	1
10	51075	ROD END, Assembly	2
11	51079	CLEVIS	1
14	44476-2	END CAP (Manufacturer's part number (HC-V-AA26) stamped on end cap identifies valve and relief setting)	2
25	44743-5	SCREW, Cap,Socket Head, 1/4-20 x 1/2"	2
26	44460	PLUG, Load Check	2
28	41836-2	NUT, Hex, 5/16"	3
29	44743-3	SCREW, Cap, Socket Head, 1/4-20 x 7/8"	2
30	51080	PLATE	1
31	51081	WASHER, Shim, 5/16"	1
32	G271506	NUT, Hex, 7/16-20	1
33	51077	END, Spool	2
34	43517	HANDLE, Valve, Standard	1
35	38902	BALL, Handle	1
36	44743-4	SCREW, Cap, Socket Head, 5/16-24 x 3/4"	3
37	G120383	WASHER, Lock, 7/16"	1

NOTE: *Individual items not listed in repair parts listing are not available separately.*

Figure 4

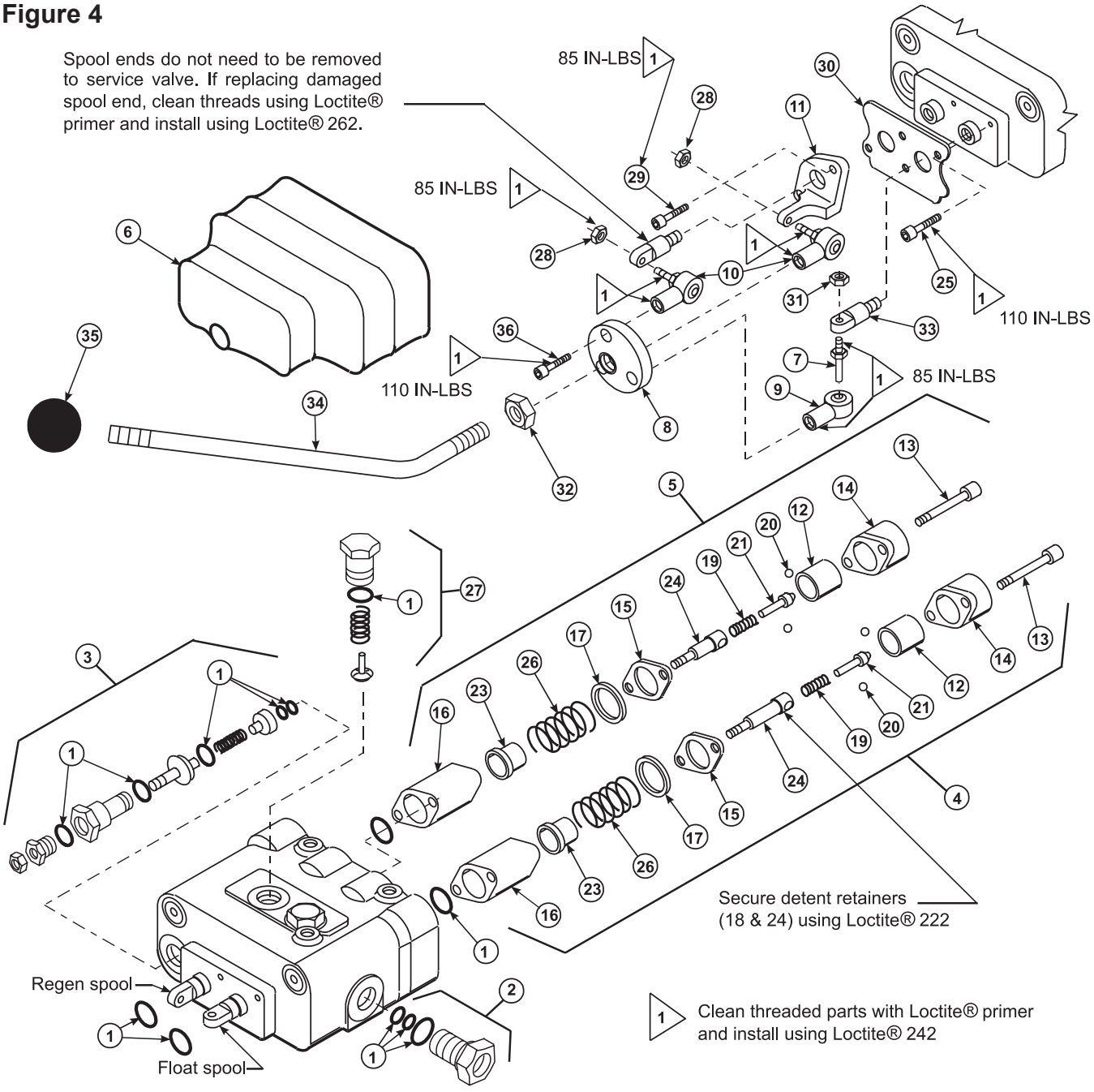
Spool ends do not need to be removed to service valve. If replacing damaged spool end, clean threads using Loctite® primer and install using Loctite® 262.
85 IN-LBS
85 IN-LBS
110 IN-LBS
110 IN-LBS
85 IN-LBS
Secure detent retainers (18 & 24) using Loctite® 222
Regen spool
Float spool
Clean threaded parts with Loctite® primer and install using Loctite® 242

Figure 5
VALVE EQUIPPED WITH LOCKOUT FEATURE

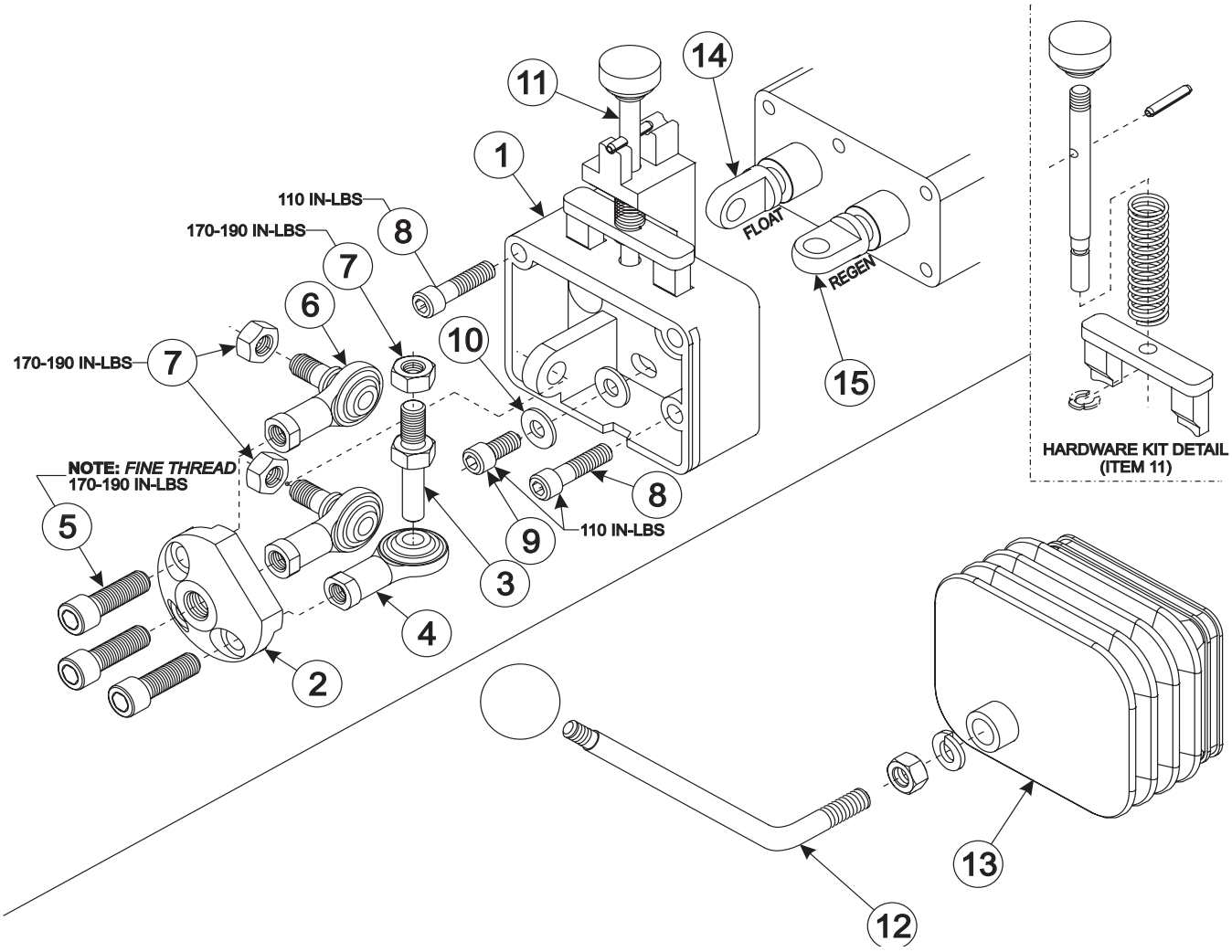

PARTS LIST - JOYSTICK SUB-ASSY WITH DUAL SPOOL LOCK

Item	Part No.	Description	Qty.
1	*	CLEVIS, Spool Lock	1
2	*	PLATE, Adapter	1
3	55821	STUD, Spool	1
4	55822	END, Rod	1
5	*	SCREW, Cap	3
6	55823	ASSY, Rod End	2
7	*	NUT, Hex	3
8	*	SCREW, Cap	2
9	*	SCREW, Cap	1
10	*	WASHER, Flat	1
11	55824	KIT, Spool Lock Hardware	1
12	56004	KIT, Bent Handle	1
13	55826	KIT, Boot/Cable Tie	1
14	55917	ADAPTER, Float Spool	1
15	55918	ADAPTER, Regen Spool	1
16	55827	KIT, Sub-Assy, Includes Items 1-11	1

*** NOTE:** *Individual items not listed in repair parts listing are not available separately.*
For valve block service parts, see previous page.

GENERAL TORQUE SPECIFICATIONS

USE THE FOLLOWING TORQUES WHEN SPECIAL TORQUES ARE NOT GIVEN

Standard American and Metric Cap Screws

AMERICAN STANDARD CAP SCREWS									METRIC CAP SCREWS								
SAE Grade	5				8				Metric Class	8.8				10.9			
Typ. Head Markings									Typ. Head Markings	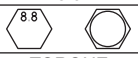				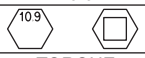			
Cap Screw	TORQUE				TORQUE				Cap Screw	TORQUE				TORQUE			
Size	FT·LBS		N·m		FT·LBS		N·m		Size	FT·LBS		N·m		FT·LBS		N·m	
Inches	MIN	MAX	MIN	MAX	MIN	MAX	MIN	MAX	Millimeters	MIN	MAX	MIN	MAX	MIN	MAX	MIN	MAX
1/4 - 20	6.25	7.25	8.5	10	8.25	9.5	11	13	M6 x 1.00	6	8	8	11	9	11	12	15
1/4 - 28	8	9	11	12	10.5	12	14	16	M8 x 1.25	16	20	21.5	27	23	27	31	36.5
5/16 - 18	14	15	19	20	18.5	20	25	27	M10 x 1.50	29	35	39	47	42	52	57	70
5/16 - 24	17.5	19	23	26	23	25	31	34	M12 x 1.75	52	62	70	84	75	91	102	123
3/8 - 16	26	28	35	38	35	37	47.5	50	M14 x 2.00	85	103	115	139	120	146	163	198
3/8 - 24	31	34	42	46	41	45	55.5	61	M16 x 2.50	130	158	176	214	176	216	238	293
7/16 - 14	41	45	55.5	61	55	60	74.5	81	M18 x 2.50	172	210	233	284	240	294	325	398
7/16 - 20	51	55	69	74.5	68	75	92	102	M20 x 2.50	247	301	335	408	343	426	465	577
1/2 - 13	65	72	88	97.5	86	96	116	130	M22 x 2.50	332	404	450	547	472	576	639	780
1/2 - 20	76	84	103	114	102	112	138	152	M24 x 3.00	423	517	573	700	599	732	812	992
9/16 - 12	95	105	129	142	127	140	172	190	M27 x 3.00	637	779	863	1055	898	1098	1217	1488
9/16 - 18	111	123	150	167	148	164	200	222	M30 x 3.00	872	1066	1181	1444	1224	1496	1658	2027
5/8 - 11	126	139	171	188	168	185	228	251									
5/8 - 18	152	168	206	228	203	224	275	304									
3/4 - 10	238	262	322	355	318	350	431	474									
3/4 - 16	274	305	371	409	365	402	495	544									
7/8 - 9	350	386	474	523	466	515	631	698									
7/8 - 14	407	448	551	607	543	597	736	809									
1 - 8	537	592	728	802	716	790	970	1070									
1 - 14	670	740	908	1003	894	987	1211	1337									

NOTE: *These values apply to fasteners as received from supplier, dry or when lubricated with normal engine oil. They do not apply if special graphite or molysulphide greases or other extreme lubricants are used.*

37° JIC Fittings

Size	Thread Size	Assembly Torque		Tube Connection F. F. F. T.	Swivel Nut or Hose Connection F. F. F. T.
		in.·lb.	ft.·lb.		
-4	7/16 - 20	140 ± 10	12 ± 1	2	2
-5	1/2 - 20	180 ± 15	15 ± 1	2	2
-6	9/16 - 18	250 ± 15	21 ± 1	1 1/2	1 1/4
-8	3/4 - 16	550 ± 25	45 ± 5	1 1/2	1
-12	1 1/16 - 12	1000 ± 50	85 ± 5	1 1/4	1
-16	1 5/16 - 12	1450 ± 50	120 ± 5	1	1
-20	1 5/8 - 12	2000 ± 100	170 ± 10	1	1
-24	1 7/8 - 12	2400 ± 150	200 ± 15	1	1
-32	2 1/2 - 12	3200 ± 200	270 ± 20	1	1

O-Ring Face Seal Tube/ Hose Swivel Nut

Metric Tube O.D. (mm)	Dash Size	Thread Size (in.)	Swivel Nut Hex Size (in.)	Swivel Nut Torque	
				N·m	lb_f·ft
5	-3	--	--	--	--
6	-4	9/16 - 18	11/16	16	12
8	-5	--	--	--	--
10	-6	11/16 - 16	13/16	24	18
12	-8	13/16 - 16	15/16	50	37
16	-10	1 - 14	1-1/8	69	51
20	-12	1-3/16 - 12	1-3/8	102	75
22	-14	1-3/16 - 12	--	102	75
25	-16	1-7/16 - 12	1-5/8	142	105
32	-20	1-11/16 - 12	1-7/8	190	140
38	-24	2 - 12	2-1/4	217	160
50.8	-32	--	--	--	--

SAE O-Ring Fittings

Size	Swivel Nut or Hose	Assembly Torque		F. F. F. T.
		in.·lb.	ft.·lb.	
2	5/16 - 24	90 ± 5	7.5 ± 0.5	1 ± .25
3	3/8 - 24	170 ± 10	14 ± 1	1 ± .25
4	7/16 - 20	220 ± 15	18 ± 1	1 ± .25
5	1/2 - 20	260 ± 15	22 ± 1	1 ± .25
6	9/16 - 18	320 ± 20	27 ± 2	1.5 ± .25
8	3/4 - 16	570 ± 25	48 ± 2	1.5 ± .25
10	7/8 - 14	1060 ±50	90 ± 5	1.5 ± .25
12	1 1/16 - 12	1300 ± 50	110 ± 5	1.5 ± .25
14	1 3/16 - 12	1750 ±75	145 ± 6	1.5 ± .25
16	1 5/16 - 12	1920 ± 125	160 ± 6	1.5 ± .25
20	1 5/8 - 12	2700 ± 150	225 ± 12	1.5 ± .25
24	1 7/8 - 12	3000 ± 150	250 ± 12	1.5 ± .25
32	2 1/2 - 12	3900 ± 200	325 ± 15	1.5 ± .25

INSTALLATION INSTRUCTIONS