CABLE CONTROLLED VALVE & PLUMBING KIT
4211 STD AND MSL LOADER
CNH TN55, TN60A, TN65, TN70, TN70A, TN75, TN75A NON-CAB TRACTORS

Valve and plumbing kit can be installed using tools ordinarily available. Valve control handle has been factory pre-assembled for ease of installation. Shut off engine and engage brakes during installation.

NOTE: *Apply sealant only to all tapered threads unless coupled with swivel adapters. When using teflon tape, wrap tape clockwise (as viewed from end) and wrap tape only twice. Keep sealant away from first two threads of tapered end to prevent contamination of hydraulic fluid. Do not use sealant on O-ring of flare adapter threads.*

WARNING: Escaping hydraulic fluid under pressure can penetrate skin causing serious injury.

- *DO NOT use your hand to check for leaks. Use a piece of cardboard or paper to search for leaks.*
- *Stop engine and relieve pressure before connecting or disconnecting lines.*
- *Tighten all connections before starting engine or pressurizing lines.*

If any fluid is injected into skin, obtain medical treatment immediately or gangrene may result.

CABLE HARNESS ASSEMBLY (Figure 2 & 3)

1. Loosely fasten cables (16) to cable straps (20) using 3/4 jam nuts (17), 3/4 internal tooth lock washer (18), and 3/4 knurled nut (19). Attach spool clevis (24) to cable ends (16) using 5/16 jam nuts (21); one on each side. Remove protective caps on opposite end of cable (16) and attach cable adapter (15). Figure 2.

2. Fasten cable assemblies (26) to valve using 1/4-20 x 3/8 socket head cap screws (25). Note which cable is "lift" and which is "tilt". Attach spool clevis (24) to lift and tilt spool of valve using 5/16 x 1 clevis pins (23) and cotter pins (22). Figure 2.

Figure 1

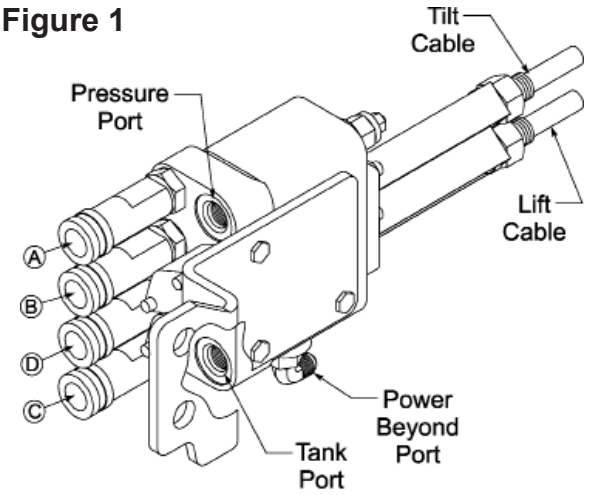

Ⓐ Bucket Cylinder Base (Blue)
Ⓑ Bucket Cylinder Rod (Red)
Ⓓ Lift Cylinder Rod (Yellow)
Ⓒ Lift Cylinder Base (Green)

CABLE CONTROL VALVE ASSEMBLY (Figure 1 & 4)

1. Install 90° elbow fitting (8) to power beyond port of valve (1). Install straight adapter fittings (19), female couplers (14), and dust plugs (15, 16, 17, 18) to pressure and tank ports of valve (1).

   NOTE: *Be sure to attach color coded dust plugs in sequence shown.*

2. Attach 3/8 x 60" hose (11) to 90° elbow fitting (8) on power beyond port on valve (1). Slide 60" protective sleeve (20) over hose (11).

3. Attach male end of 3/8 x 84" hose (9) to tank port on valve (1). Slide 88" long protective sleeve (21) over hose (9).

4. Attach male end of 3/8 x 90" hose (10) to pressure port on valve (1). Slide 90" protective sleeve (22) over hose (10).

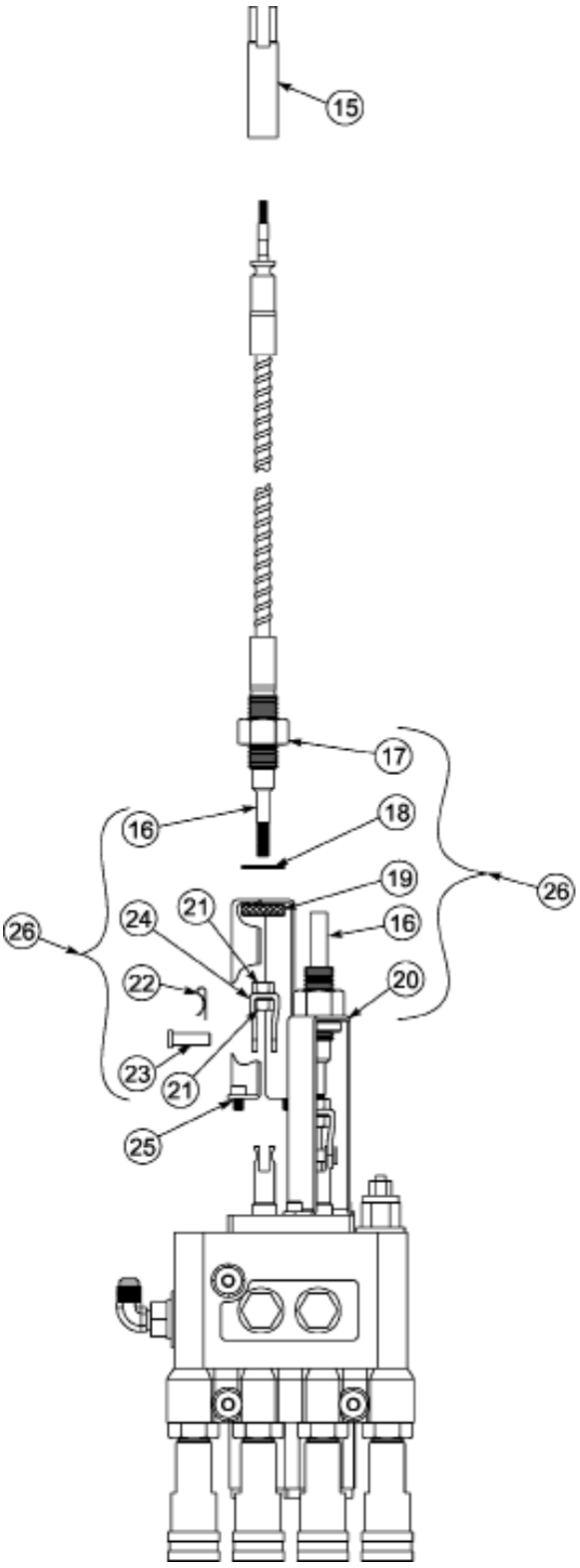

Figure 2

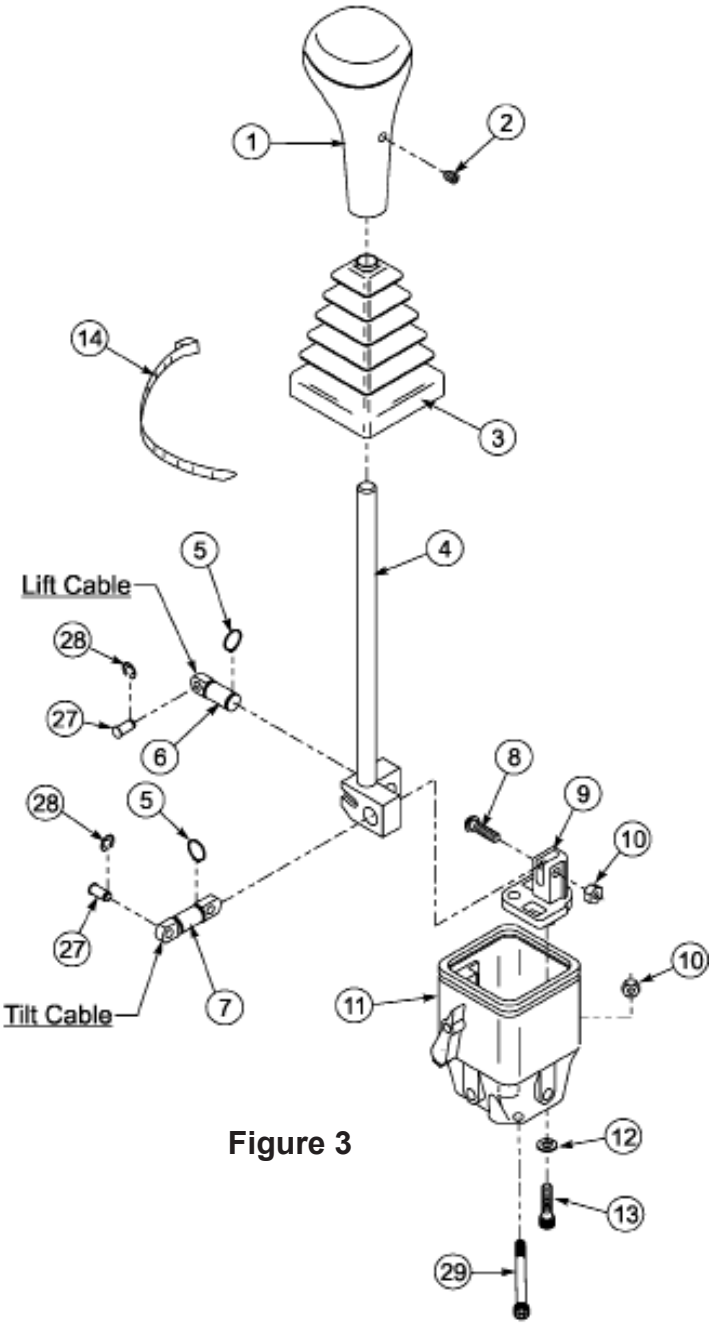

Figure 3

PARTS LIST - JOYSTICK AND CABLE HARNESS - Figure 2

Item	Part No.	Description	Qty.
1	51814	HANDLE, Plastic	1
2	G11506909	SCREW, Set, 6MM-1.00 x 8MM LG	1
3	51805	BOOT	1
4	*	HANDLE ASSEMBLY, Joystick	1
5	*	RETAINING RING, External 15/16”	4
6	*	ROD END, Single	1
7	*	ROD END, Double	1
8	51894	BOLT, Pan Head Slotted, 6MM-1.00 x 22MM LG	1
9	*	CLEVIS	1
10	**	NUT, Lock, Nylon Insert, 6MM-1.00	2
11	54740	BASE W/LOCK MECHANISM	1
12	41837-1	WASHER, Lock, 1/4	1
13	51812-1	SCREW, Socket Head, 6MM-1.00 x 30MM	1
14		CABLE TIE, 3/16” (not available as service part)	1
15	52242	CABLE ADAPTER	2
16		CABLE (not available as service part, see Item 26)	1
17	48948-18	NUT, Jam, 3/4-16	1
18	51798	WASHER, Lock, Internal Tooth, 3/4	1
19	51799-1	NUT, Knurled, 3/4-16	1
20	51800	STRAP, Valve Adapter	1
21	48948-12	NUT, Jam, 5/16-24	2
22	41903-15	PIN, Cotter, 3/32 x 3/4	1
23	41902-20	PIN, Clevis, 5/16 x 1	1
24	51804	CLEVIS	1
25	44743-1	SCREW, Socket Head, 1/4-20 x 3/8	4
26	51758-2	CABLE ASSEMBLY, 40” (Includes Items 16 thru 24)	1
27	**	PIN, 1/4”	2
28	**	RETAINING RING, External 1/4”	2
29	**	SCREW, Socket Head, 6MM-1.00 x 75MM	1
30	55578	* KIT, ASSY REPAIR (Includes Items 4-7 & 9)	1
31	55579	** KIT, PIN/CABLE RETAINER (Includes Items 10 & 27-29)	1
	51757	JOYSTICK ASSEMBLY (Includes Items 1-14 & 27-29)	1

ATTACHING VALVE TO TRACTOR (Figure 4).

1. Attach valve (1) to valve mount plate (4) using three 5/16 x 3/4" cap screws (6) and 5/16 lock washers (7).

   NOTE: *Valve mount plate (4) must be attached to working port side of valve and bent offset in valve mount plate points away from valve.*

2. On right side, remove two 20mm bolts securing tractor platform support plate to tractor casting. Fasten valve mount plate (4) to tractor platform support plate and tractor casting using two 20mm x 65mm cap screws (12) and 20mm lock washers (13).

3. On rear remotes of tractor, remove tractor steel oil line which is attached between pressure port and power beyond port of tractor. Remove plug from tank port of tractor as shown.

4. Install the 18mm male O-ring end of straight adapter fitting (26) into power beyond port of tractor. Install female end of 90° elbow (25) onto straight adapter fitting (26), making sure elbow is pointing downward. Route 3/8 x 60" hose (11), which is attached to power beyond port of valve (1), over rear tractor axle and under upper 3 point hitch lift arm, attach to male end of 90° elbow (25).

5. Loop 3/8 x 90" hose (10), which is attached to pressure port of valve (1), toward rear of tractor. Route hose over rear tractor axle and under upper 3 point hitch lift arm, attach to tractor pressure port elbow.

6. Install 3/4 BSPP male O-ring end of straight adapter fitting (23) into tank port of tractor. Install female end of 90° elbow (24) onto straight adapter fitting (23), making sure elbow is pointing toward right side of tractor. Loop 3/8 x 84" hose (9), which is attached to tank port of valve (1), toward rear of tractor. Route hose over rear tractor axle and under upper 3 point hitch lift arm, attach to 90° elbow (24) on tank port of tractor.

7. Secure hose (9, 10, 11) under right side of tractor along steel lines with two adjustable straps (27). Use adjustable strap (27) to secure hoses at power beyond port hardware on rear of tractor.

MOUNTING AND ASSEMBLING JOYSTICK ON TRACTOR (Figure 4).

1. Attach joystick mounting bracket (5) to right tractor fender, using holes provided in fender, secure with three 5/16 x 1" cap screws (31), 5/16 flat washers (30) and 5/16 lock nuts (32).

2. Attach joystick assembly (3) to mounting bracket (5) using two 5/16 x 3-1/4" cap screws (29), 5/16 flat washers (30) and 5/16 lock nuts (32).

   NOTE: *Joystick assembly must be installed with lockout knob on joystick toward outside of tractor.*

JOYSTICK ASSEMBLY AND MOUNTING ON TRACTOR - (Figures 3 & 4)

1. Remove rubber plug from right rear corner of tractor platform. Push cable ends (2) through tractor platform, making sure cables are not twisted. (Figure 4).

2. Disassemble handle (1) and boot (3) from joystick assembly by loosening set screw (2) in handle (1) and lifting handle (1) and boot (3) from joystick lever.

3. Remove socket head screw (29) and locknut (10) from lower side hole of base (11).

4. Slide "lift cable" (16) and cable adapter (15) through rear hole on bottom of base (11). Attach cable adapter (15) to rod end (6) with pin (27) and retaining ring (28).

5. Slide "tilt cable" (16) and cable adapter (15) through front hole on bottom of base (11). Attach cable adapter (15) to rod end (7) with pin (27) and retaining ring (28).

6. Lock lift cable and tilt cable into place by reinstalling socket head screw (29) and locknut (10) through lower side hole of base (11).

7. Slide boot (3) onto joystick handle assembly and reinstall handle (1).

8. Adjust cables at valve to get desired performance from joystick.

9. Make sure cables and hose are not binding or coming into contact with any moving part.

10. Coupler loader hoses to corresponding female couplers (14) on valve (1). It is important to make sure color coding corresponds between spiral bands and dust plugs on each hose.

11. Bundle loader hoses with tarp strap (28) and secure to loader mount.

12. After all plumbing has been completed, slowly cycle lift and bucket cylinders several times to purge air from hydraulic system. Retract cylinders and shut off engine. Replenish tractor hydraulic system.

    NOTE: *When cycling loader, operate loader according to operation decal located on joystick knob. If directional control lever is wrong or loader will not lower, recheck connections shown.*

WARNING: *Escaping hydraulic fluid under pressure can have sufficient force to penetrate skin causing serious personal injury. If injured by escaping hydraulic fluid, obtain medical treatment immediately.*

PARTS LIST – VALVE & PLUMBING KIT Figure 4

Item	Part No.	Description	Qty.
1	51813	VALVE, Prince LVR (3000 psi)	1
2	51758-2	CABLE ASSEMBLY	2
3	51757	JOYSTICK ASSEMBLY, INDEMAR	1
4	51888	MOUNT PLATE, Valve	1
5	52243	BRACKET, Joystick Mounting	1
6	41838-26	SCREW, Cap, 5/16-18 x 3/4 YDP	3
7	41837-2	WASHER, Lock, 5/16 YDP	3
8	32845-2	FITTING, Elbow, 3/4-16 JIC x 3/4-16 O-Ring, 90°	1
9	50439-3	HOSE, 3/8 x 84” Tank	1
10	50439-4	HOSE, 3/8 x 90” Pressure	1
11	36844-8	HOSE, 3/8 x 60” Power Beyond	1
12	6090-130	SCREW, Cap, 20MM-2.50MM x 65MM	2
13	48093-2	WASHER, Lock, 20mm	2
14	6147-10	COUPLER, Quick, Female, 3/4-16 O-ring YDP	4
15	4838-12	DUST PLUG, Blue	1
16	4838-4	DUST PLUG, Red	1
17	4838-13	DUST PLUG, Yellow	1
18	4838-14	DUST PLUG, Green	1
19	48670-1	FITTING, Straight, 3/4-16 O-ring x 3/4-16 O-ring	4
20	34853-42	SLEEVE, Nylon, 1-1/4 x 60”	1
21	34853-53	SLEEVE, Nylon, 1-1/4 x 88”	1
22	34853-62	SLEEVE, Nylon, 1-1/4 x 90”	1
23	36249-2	FITTING, Straight, 3/4 BSPP x 7/8-14 JIC	1
24	34128-1	FITTING, Elbow, 7/8-14 JIC x 7/8-14 JIC	1
25	34128-2	FITTING, Elbow, 3/4-16 JIC x 3/4-16 JIC	1
26	41173-2	FITTING, Straight, 18mm-1.5 x 3/4-16 JIC	1
27	8137-3	STRAP, Adjustable .50 x 20”	3
28	7438-1	STRAP, Tarp	1
29	41838-80	SCREW, Cap, 5/16-18 x 3-1/4	2
30	42502-7	WASHER, Flat, 5/16	5
31	41838-60	SCREW, Cap, Hex Head, 5/16-18 x 1”	3
32	41840-2	NUT, Lock, 5/16-18	5

Figure 4
Plumbing Control Valve to Loader and Tractor Hydraulics

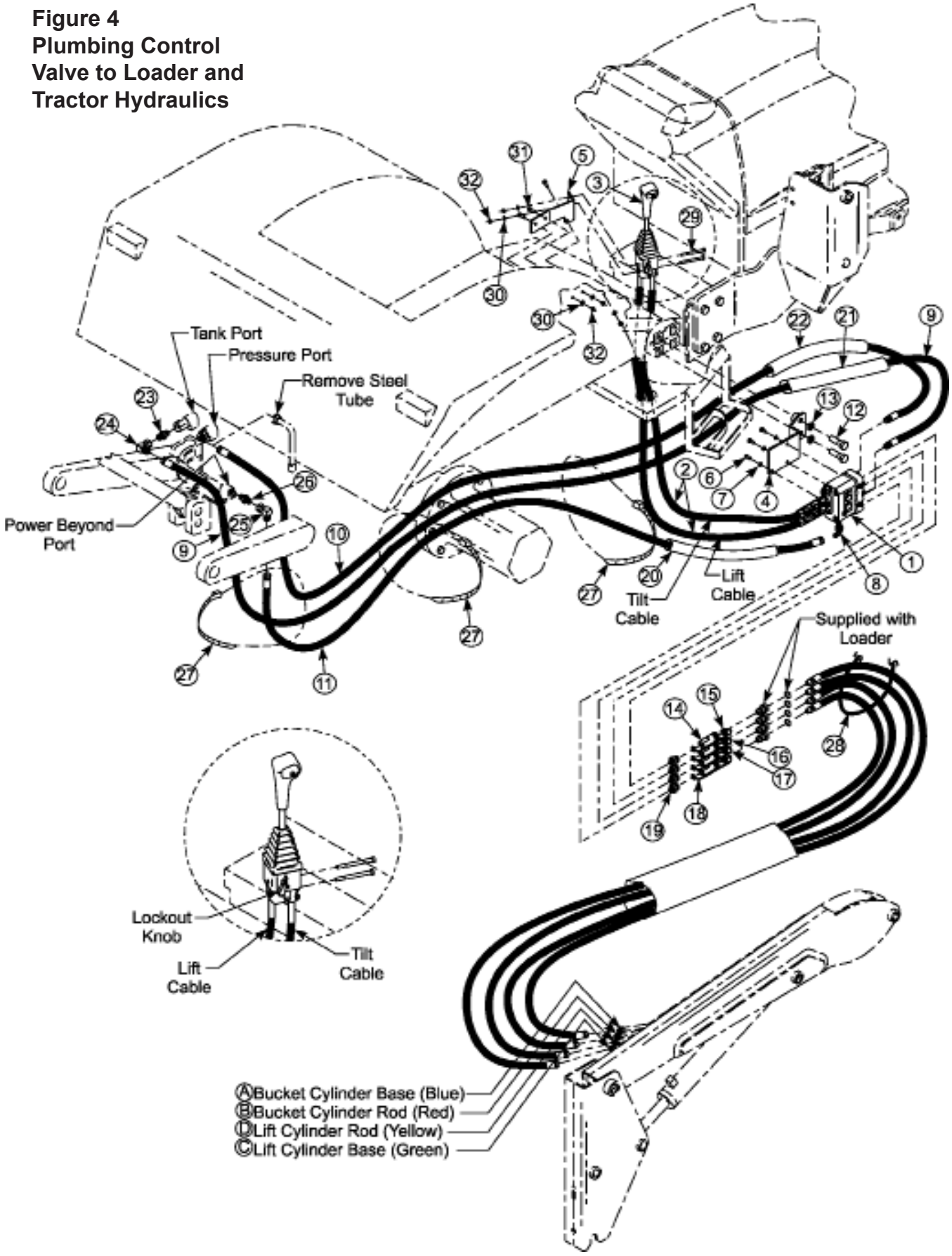

PRINCE LVR VALVE SERVICE

Following is an outline procedure for disassembling and reassembling valve.

WARNING: *Valve has a valve relief setting preset at the factory. Tampering with this setting can cause serious injury to operator and damage to tractor or loader. Unauthorized adjustments or service to valve relief will VOID Warranty of both loader and tractor. If adjustments or service to valve relief are required during warranty period, an authorized service department must be consulted for authorization.*

VALVE DISASSEMBLY (Figure 5)

NOTE: *It is advisable to mark or tag all parts so they will be reinstalled in their proper position.*

1. Remove hex head cap screws (13) and detent end caps (14) from both spools. Remove detent sleeve (12) from regen spool. Remove steel balls (20), poppet (21), and poppet spring (19) from detent retainer (24). Remove retaining flat (15) and detent spacer (16) from regen spool.

2. Secure handle end of regen spool. Using a rod through retainer ball holes, remove detent retainer (24) from regen spool.

   NOTE: *Detent retainers (18 & 24) are installed on spools using Loctite 222 or equivalent. If spool adapter comes loose instead of detent retainer, pull spool completely out of valve and secure spool using locking pliers (vise grips, for example) on land section of spool not machined for valve bore.*

3. Remove washer (17), centering spring (26), and stop cup (23) from regen spool.

4. Holding in on float detent sleeve (22), push in on float spool from handle end and remove steel balls (20) from float detent retainer (18). Remove float detent sleeve (22), poppet (21), poppet spring (19), retaining flat (15) and spacer (16) from float spool.

5. Secure handle end of float spool. Using a rod through retainer ball holes, remove detent retainer (18) from float spool.

   NOTE: *Detent retainers (18 & 24) are installed on spools using Loctite 222 or equivalent. If spool adapter comes loose instead of detent retainer, pull spool completely out of valve and secure spool using locking pliers on land section of spool not machined for valve bore.*

   Remove washer (17), centering spring (26), and stop cup (23) from float spool.

6. Push spools in from cable end until rear spool seals (1) are exposed. Using wire hook and screwdriver, remove rear spool seals. Push spools in from the rear until front spool seals (1) are exposed. Using wire hook and screwdriver, remove front spool seals.

7. Clean all parts, including valve body, in suitable cleaning solvent. After cleaning parts with solvent, use air pressure to blow any dirt or excess solvent from all parts, including inside of valve body.

VALVE REASSEMBLY (Figure 5)

1. Examine all parts for wear and damage and replace if necessary.

2. Lubricate all O-rings and spools with oil to prevent damage when assembling.

3. Lubricate all detent and spring centering parts with a light coat of grease before disassembling.

4. Reassemble all parts in reverse order of disassembly.

NOTE: *Use Loctite 222 or equivalent when installing detent retainers (18 & 24).*

RELIEF VALVE, LOAD CHECK PLUGS, AND POWER BEYOND SLEEVE

NOTE: *Relief valve (3), load check plugs (27), and power beyond sleeve (2) may be removed separately to clean, inspect, or replace parts without removing valve spools.*

NOTE: *If repairing or replacing relief valve (3), torque larger hex nut (relief body) to 20-25 ft.·lbs.*

Figure 5
Prince LVR
Valve

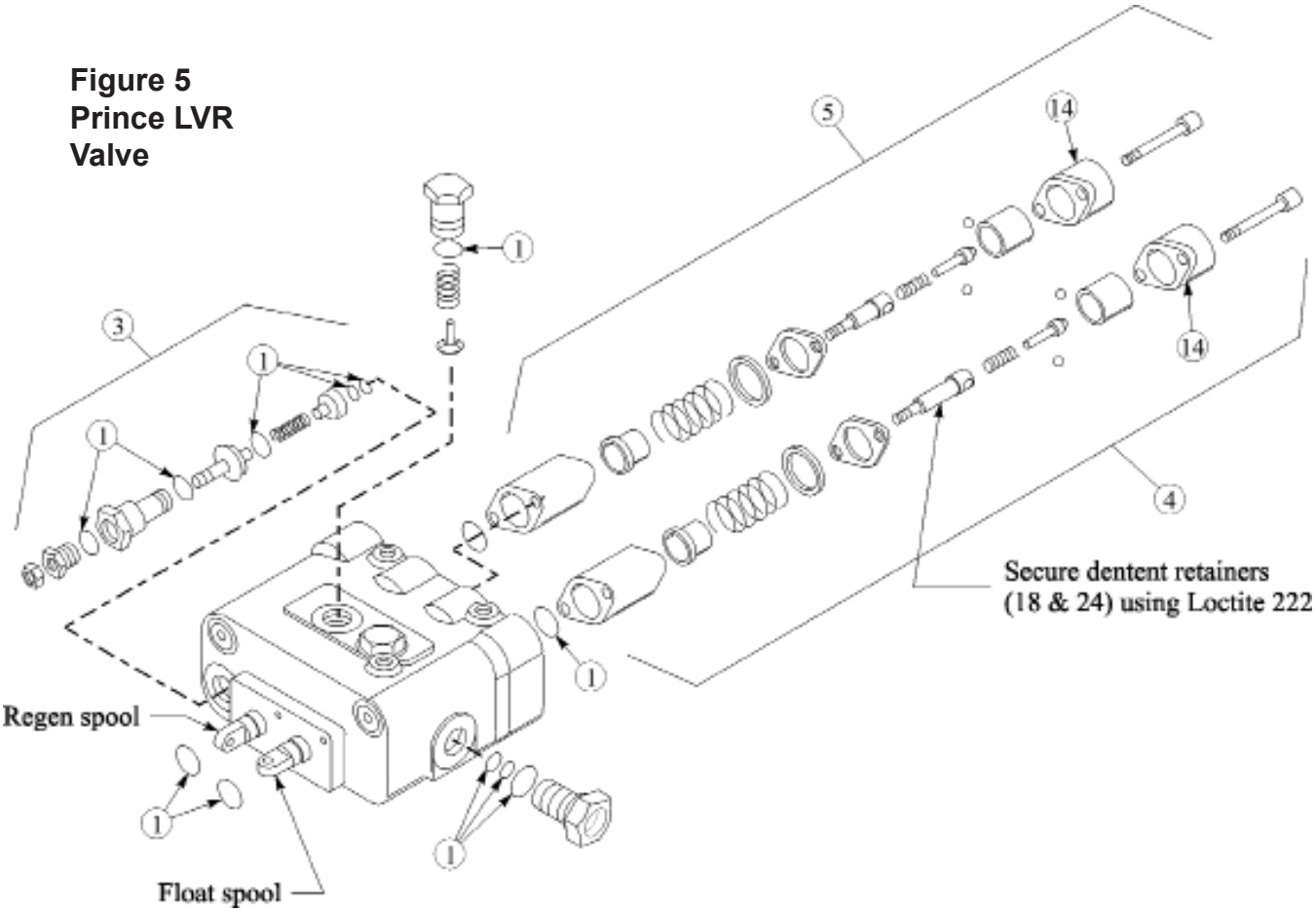

PARTS LIST – PRINCE LVR VALVE Figure 5

Item	Part No.	Description	Qty.
1	43633	SEAL KIT, Valve, Prince LVR (3000 psi)	1
2	43636	POWER BEYOND SLEEVE	1
3	51813	RELIEF Valve (3000 psi)	1
4	43638	FLOAT KIT (Includes items 13,14, 15, 16, 17, 18, 19, 20, 21, 22, 23 & 26)	1
5	43639	REGEN KIT (Includes items 12, 13, 14, 15, 16, 17, 19, 20, 21, 24, & 26)	1
14	44476-6	END CAP (MFR's P/N, HC-V-AA23, stamped on end cap with valve & relief setting)	2

NOTE: *Individual items not listed in repair parts listing are not available separately.*

INSTALLATION INSTRUCTIONS